Boiler Construction

and

Laying Out

by

H. S. JEFFERY

COPYRIGHT NOTICE

This book was written by Mr. H. S. Jeffery expressly for the International Brotherhood of Boilermakers, Iron Shipbuilders and Helpers of America.

The book is the property of the Brotherhood, the contents first appearing in the Brotherhood Journal each month during 1910. Each monthly article is protected by copyright, and in Apr. 1912 ~~December, 1910~~, the entire contents of this book were coyrighted.

BOILER CONSTRUCTION AND LAYING OUT

BEING A TREATISE ON

THE PROPERTIES OF BOILER MATERIALS, WORKSHOP PRACTICES, BOILER DESIGN AND CONSTRUCTION, AND LAYING OUT OF PATTERNS

BY

H. S. JEFFERY

PRESIDENT OF THE JEFFERY CORRESPONDENCE SCHOOLS, FORMERLY PRINCIPAL OF THE SCHOOLS OF BOILERMAKING AND SHEET METAL PATTERN DRAFTING OF THE INTERNATIONAL CORRESPONDENCE SCHOOL.

PRICE, $2.00

[Kansas City, Mo., [illegible] -
[illegible] 1913]

PREFACE

FOR the benefit of those who may contemplate making use of this work, wholly or in part, it is well to lay before them at the outset a general statement of the plan upon which it is written, together with some advice for the use and study of the same.

Certain parts are theoretical in their nature, but aim to place before the reader all that is necessary to a thorough understanding of the work, and, so to speak, present the practical side of theory.

A statement of each part in prominent type appears at the head of each demonstration, and as each figure is numbered, also lettered, an opportunity is afforded to trace each move easily and readily.

The assumption is that the reader has no previous knowledge of the work. It is advisable in the study of all works of a scientific nature to begin at the beginning and take everything in its course. While each part will be complete in itself, some parts are necessarily carried farther into detail than others, and reference made from one part to another, pointing out similarity of principle. Individual solutions should not be sought; the principles or the foundation is the most important, for, when understood, no trouble should be experienced in applying them to work generally.

It is possible that errors will creep in, and should any be discovered information to that effect will be cheerfully received.

Yours very truly,

H. S. JEFFERY.

INDEX

BOILER CONSTRUCTION.

A

B

C

D

E

F

H

LAYING OUT.

Page.

L

M

N

O

P

R

BOILER CONSTRUCTION

BOILER MATERIALS

STRESSES

STEEL, IRON AND CAST IRON.

1. The materials used in boiler construction are steel, iron and cast iron, also copper, brass and various alloys. Steel has supplanted iron, and because it can be made as cheap, if not cheaper – and because of a greater tensile strength. Also is homogeneous, whereas iron is not.

The term homogeneous means that all parts are in equation – similar in material – or of same composition or structure throughout. An iron plate will stand a greater stress with the grain than against the grain. It therefore is not in equation and not homogeneus.

2. Steel is made from iron, and the latter is chiefly derived from ores, as bagnitite, hematite and imonite, which are abundant and widely distributed. As found in commerce it is never pure, but is combined with small quantities of carbon, phosphorus, silicon, etc. The commercial steel is made by either the Bessemer or the open-hearth process. The former was patented in 1855 by Henry Bessemer. The process consisted of eliminating the carbon and silicon from the pig iron preparatory to its conversion into steel or ingot iron, by forcing a blast of air through the metal while melting.

3. The open-hearth, or Siemens Martin process, is the making of steel in which the pig iron is decarbonized by melting in an open-hearth regenerative furnace in combination with scrap iron and iron ore. The Association of American Steel Manufacturers have adopted the following standard specifications for open-heart plate:

SPECIAL OPEN-HEARTH PLATE AND RIVET STEEL.

4. Steel shall be of three grades: Extra soft, fire-box and flange or boiler.

EXTRA SOFT STEEL AND RIVET STEEL.

Ultimate strength, 45,000 to 55,000 pounds per square inch; elastic limit, not less than one-half the ultimate strength; elongation 26 per cent; cold and quench tests, 180 degrees flat on itself; without fracture on bent portion; maximum phosphorus, .04 per cent, and maximum sulphur, .04 per cent.

FIRE BOX STEEL.

Ultimate strength, 52,000 to 62,000 pounds per square inch; elastic limit, not less than one-half the ultimate strength; elongation, 26 per cent; cold and quench tests, 180 degrees flat on itself, without fracture on bent portion; maximum phosphorus, .04 per cent; and maximum sulphur, .04 per cent.

FLANGE OR BOILER STEEL.

Ultimate strength 55,000 to 65,000 pounds per square inch; elastic limit not less than one-half the ultimate strength; elognation 26 per cent; cold and quench tests 180 degrees flat on itself, without fracture on bent portion; maximum phosphorus .06 per cent, and maximum sulphur .04 per cent.

5. The ultimate or tensile strength means the ability to resist a given tension or stress. When a force acts it tends to draw apart the parts of a body, especially of a line, cord or sheet, combined with an equal and opposite system of resisting forces of cohesion holding the parts of the body together. Thus, when an ultimate or tensile strength of 60,000 pounds is stated, it means that one square inch of solid metal will approximately resist a force of 60,000 pounds before pulling apart.

6. The ELASTIC LIMIT, or the LIMIT OF ELASTICITY, is the point of stress beyond which an elastic body loses power to return completely to its former shape and size. If the load applied exceeds the elastic limit, then the plate is stretched, or lengthened – and no boiler or structure should be subjected to a stress equal to, or beyond the elastic limit.

The DUCTILITY of a plate means that it is capable of being drawn out. In Fig. 1 is shown the test piece as advocated by the Association of American Steel Manufacturers, and the following are the rules governing the test:

7. All tests and inspections shall be made at place of manufacture prior to shipment. The tensile strength, limit of elasticity and ductility shall be determined from a standard test piece, cut from the finished material, the standard shape of said test piece for sheared plates to be as shown in Fig. 1. Test coupons cut from other material than plates may be the same as those for the plates, or they may be

planed or turned parallel throughout their entire length. The elongation shall be measured on an original length of eight inches, except in round of five-eighth inch or less in diameter, in which case the elongation shall be measured in the length, equal to eight times the diameter of the section tested. Four coupons shall be taken from each melt of finished material; two for tension and two for bending.

Material, which is to be used without annealing or further treatment, is to be tested in the condition in which it comes from the rolls.

TEST PIECE.

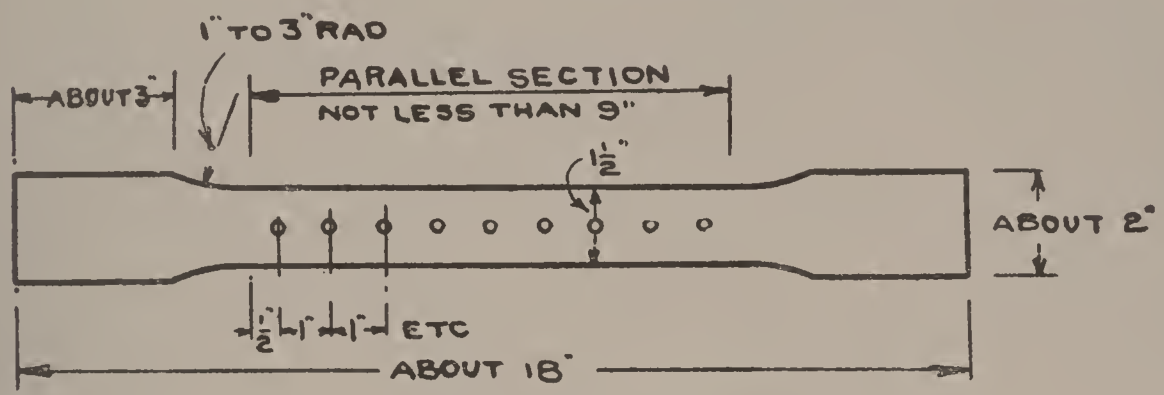

Fig. 1.

When material is to be annealed, or otherwise treated before use, the specimen representing such material is to be similarly treated before testing. Each finished piece of steel shall be stamped with the melt number. All plates shall be free from surface defects, and to have a workmanlike finish.

COLD AND QUENCH TEST.

8. The COLD test is merely bending a section of plate in its natural condition, and the QUENCH test is the heating and then the cooling of the plate, which tends to harden it—and then the bending operation in the manner set forth in the specifications of the Association of American Steel Manufacturers.

9. Cast iron, which is a commercial iron produced in a blast furnace and containing a large proportion of carbon, some of which is segregated, is neither ductile nor malleable, but brittle. In addition it is liable to have more or less blow-holes. It is fast passing away in boiler construction, and some states and cities prohibit its use in boiler construction, except such parts not subject to pressure.

10. Wrought iron is a commercial iron produced by a puddling furnace or forge, and contains little carbon and other substances. It usually is fibrous, ductile and malleable. Bar-iron, weld-iron and steel are various differing compounds of iron, containing less carbon than

cast iron and more than wrought iron that can be forged, tempered and sensibly hardened by heating to redness and suddenly cooling. The three varieties of manufactured iron differ not only in the degree of their properties, but also in the proportions of their constituents.

Malleable iron is cast iron that has been rendered tough and malleable by long continued high heating while embedded in powdered hematite, ferric oxid or some other decarbonizing material, and allowed to cool slowly.

COPPER AND BRASS.

12. A reddish ductile metallic element; called copper, was formerly used extensively in boiler construction for firebox furnace sheets, staybolts, and to some extent for flues. The cost of copper, however, is so great that it is not used to any extent for the foregoing purposes in the United States of America, though it is used more or less in boiler construction in some of the foreign countries. An alloy of copper and zinc, called brass, which is harder than copper and quite ductile, is used for washout plugs and various fittings. Formerly an alloy of copper, especially with tin, was called brass. The modern alloy of zinc came into use in the last century.

THE BOILER SHELL.

13. A boiler shell or cylinder subject to internal pressure has a force that tends to rupture it through the longitudinal plane, or lengthwise. And a force that tends to rupture it transversally, or crosswise. In Fig. 2 the arrows A and B represent the force that tends to part the cylinder transversally, and the arrows C and D represent the force that tends to part the cylinder longitudinally.

14. The latter force is the one of greatest concern – and, for the reason that the total force acting on the cylinder transversally is ap-

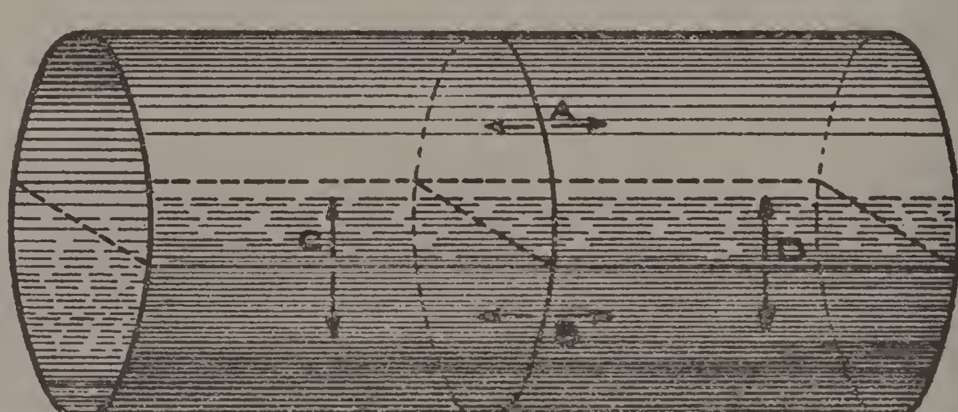

Fig. 2.

proximately one-half as great as the total force acting on the cylinder longitudinally, or in other words, the force acting on one square

inch of solid plate in the longitudinal plane, therefore, the transverse strength, considering only a seamless cylinder, is twice as strong as the longitudinal strength.

15. The total force tending to part the cylinder, Fig. 2, through the longitudinal plane is equal to the working pressure per square inch multiplied by the cross-sectional area of the cylinder. Assuming the inside diameter of Fig. 2 to be 66 inches and the length 14 feet, the cross-sectional area is equal to the length of the cylinder in inches multiplied by the inside diameter in inches – and in the foregoing case will be: 168 (length in inches) $\times$ 66 (diameter in inches) = 11,088 square inches. If the working pressure is 100 pounds per square inch, the total force acting on the longitudinal plane will be: 100 (working pressure) $\times$ 11,088 (surface exposed to pressure) = 1,108,800 pounds.

16. The force to resist the foregoing will depend upon the tensile strength and the thickness of plate. If a five-eighths inch plate, having a tensile strength of 55,000 pounds, is used the resisting force will be the length of the plate in inches multiplied by the thickness in inches, multiplied by the tensile strength; or, in the above instance, will be: 168 (length in inches) $\times \frac{5}{8}$ (thickness in inches) $\times$ 2 (both sides) $\times$ 55,000 (tensile strength) = 6,930,000 pounds. The calculations bring out that the force acting longitudinally on the cylinder is 1,108,800 pounds, while the resisting force is 6,930,000 pounds; therefore the ration, or the factor of safety, between the bursting pressure and the working pressure, is: 6,930,000 $\div$ 1,108,800 = 6.25.

17. The force acting transversally on the cylinder is equal to its cross-sectional area multiplied by the working pressure per square inch, which, in this case, is $66 \times 66 \times 7{,}854 \times 100 = 342{,}100$ pounds. The force to resist the foregoing is the strength of the solid plate in the transverse plane. The area of the plate is found by multiplying the circumference by the neutral diameter, which is equal to the inside diameter, plus one thickness of plate, or $66\frac{5}{8}$ (neutral dimaeter) $\times$ 3.1416 (constant) $\times \frac{5}{8}$ (thickness) = 78.2 square inches. The resisting force is then $78.2 \times 55{,}000 = 4{,}301{,}000$ pounds.

The calculations bring out that the force acting on the transverse plane is 342,100 pounds and the resisting force is 4,301,000 pounds, therefore, the bursting pressure exceeds the working pressure by 4,301,000 divided by 342,100 = 12.5, thus showing that the transverse load is approximately one-half the longtitudinal load, and this is true regardless of the pressure per square inch.

18. The foregoing calculations are based on a seamless, or jointless cylinder. A large boiler shell, however, is not seamless, unless welded, and as a welded joint is not to be depended upon, practically every boiler, tank and similar structure is constructed with a riveted joint. The method of connecting the plates necessitates rivet holes,

and the punching or the drilling of the holes in the plate injuries the plate—that is to say leaves less solid plate to resist the forces acting upon the respective planes.

Due reflection over these statements will show that if the longitudinal joint, regardless of the type, could be made as strong as the solid plate, which is 100 per cent, the fact that the transverse ratio or resisting power to the working pressure is twice as great as the longitudinal ratio or resisting power to the working pressure permits the transverse point – called the GIRTH SEAM – to be made one-half the strength of the longitudinal seam – and if this was done the ratio between the bursting and the working pressure would, theoretically, be in equation throughout the cylinder.

19. In boiler and tank construction, etc., the aim should be to make the cylinder as round as practicable, for if otherwise the internal pressure causes the cylinder, unless braced, to form to a circle. If the cylinder is round in the first place the pressures causes no rounding up, but merely maintains the round form, but if the cylinder is not round when the pressure is applied it undergoes a change in form, and when the pressure is relieved the cylinder returns to its old form. The constant changing of the shape works the metal and also causes the riveted seams to leak. Since such undue stresses can not be calculated, the assumption in the case is that the cylinder has been made as round as practicable.

20. The factor of safety is merely the ratio between the working pressure and the bursting pressure. The factor of safety, however, is not the ratio based on the longitudinal seam per 100 per cent basis, but upon the actual percentage of the joint and the percentage of the joint is called the EFFICIENCY. In the calculation, Art. 16, the factor of safety for the longitudinal seam, which was taken at 100 per cent, was found to be 6†, but if the efficiency of the longitudinal joint should be 75 per cent, then the factor of safety would be: $.75 \times 6† = 4.54$ factor of safety.

If 100 pounds pressure must be maintained and a factor of 5 is desired, which is the generally adopted factor of safety for commercial work, the efficiency must be made greater than 75 per cent, or the thickness of the plate used be heavier than three-eighth inch. All the foregoing shows that the allowable working pressure depends upon the thickness of the plate, upon the diameter of the boiler; the factor of safety; the efficiency of the joint and the tensile strength of the plate. The allowable working pressure may be readily found by the following formula:

21. Where:

TS = Tensile strength of plate in pounds.
T = Thickness of plate in inches.
D = Diameter of boiler in inches.

F = Factor of safety.
E = Efficiency of joint.
A = Allowable working pressure per square inch.

$$\frac{TS \times T \times 2 \times E}{D \times F} = A$$

Considering the 66-inch by 14-foot boiler with $\frac{3}{8}$-inch plate, tensile strength 55,000 pounds, the efficiency of the longitudinal seam as 80 per cent, and the factor of safety as 5, the allowable working pressure by employing the formula will be

$$\frac{55{,}000 \times .375 \times 2 \times .80}{66 \times 5} = 100 \text{ pounds working pressure.}$$

22. When testing the boiler care should be exercised not to apply an excessive pressure, for though a factor of 5 is used, the elastic limit of the plate, as mentioned in Art 4, is only 50 per cent of the ultimate strength, and this being true limits the pressure for testing purposes. Merely because a boiler stands a pressure far beyond the working pressure desired is no indication that it is safe. Theoretically, if the boiler in the foregoing instance is subjected to a cold water or hydrostatic test of 275 pounds (which it might stand without a leak), it has been injured rather than benefitted, as the test applied reached the elastic limit – that point where the plate is stretched and does not return to its former shape and size. The placing of the holes in the sheet by punching may injure the plate more or less, and though, theoretically, the elastic limit may be 50 per cent of the ULTIMATE strength, it may, due to the foregoing, be considerably less, therefore, if the hydrostatic test is made one and one-half times the working pressure it will serve as much good, if not more good, than if a greater pressure is applied.

RIVETED JOINTS; THEIR CONSTRUCTION AND FAILURE

TYPES OF RIVETED JOINTS

LAP JOINTS.

23. In Fig. 3 is shown two plates riveted with one row of rivets. When plates are so riveted the joint is called a SINGLE-RIVETED LAP JOINT. When two rows of rivets are used, as shown in Fig. 4, the joint is called a DOUBLE-RIVETED LAP JOINT, and when three rows of rivets are used, as shown in Fig. 5, the joint is called a TRIPLE-RIVETED LAP JOINT.

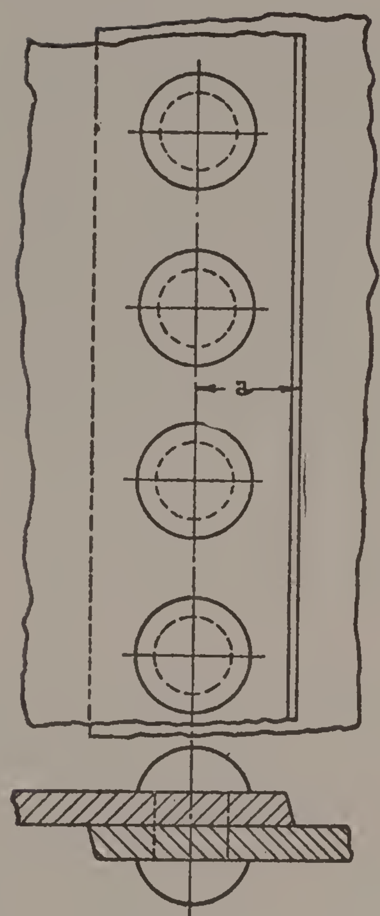

Fig. 3.

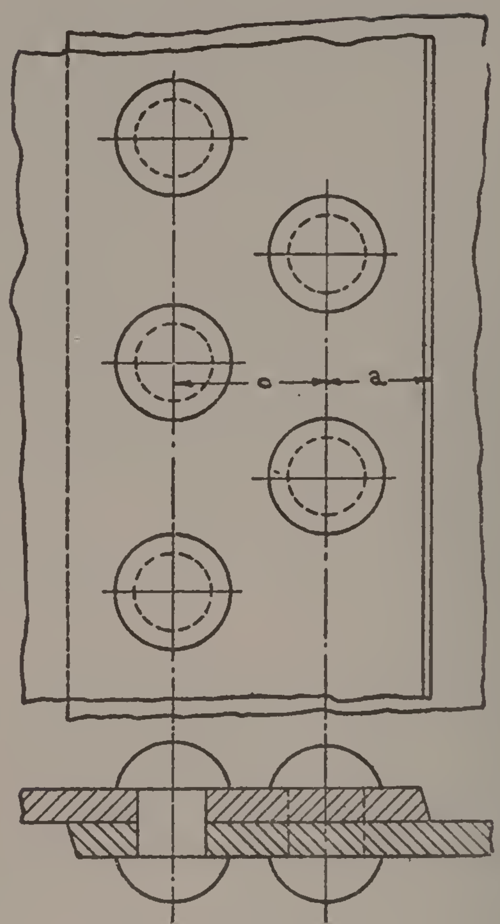

Fig. 4.

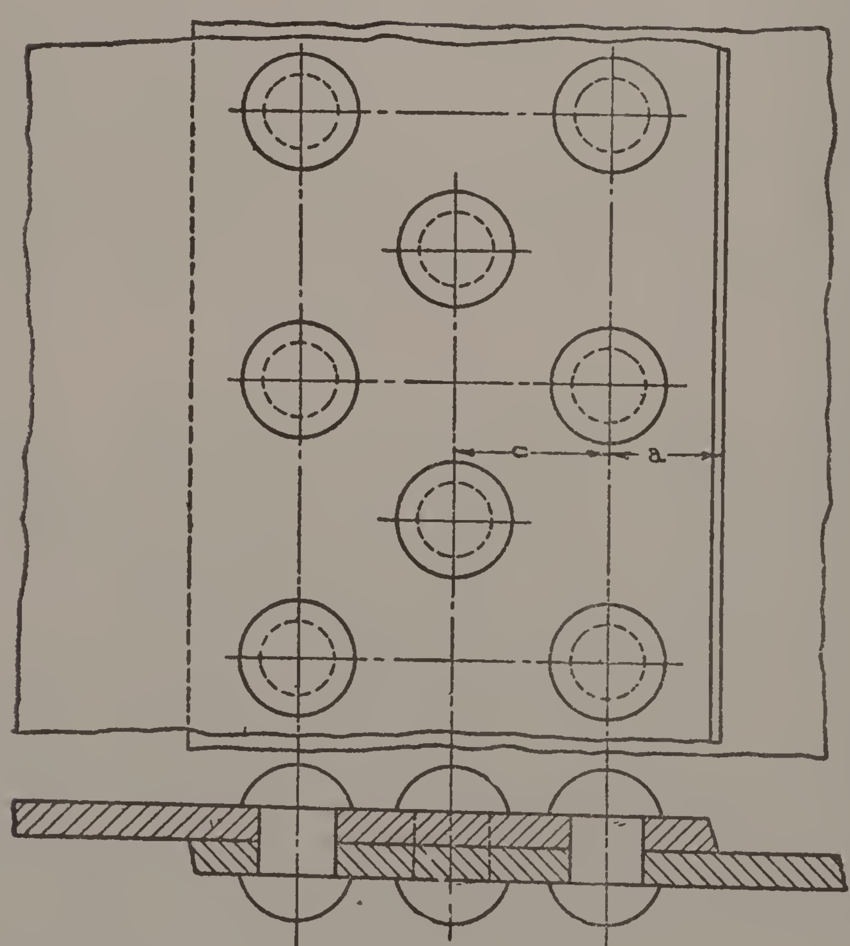

Fig. 5.

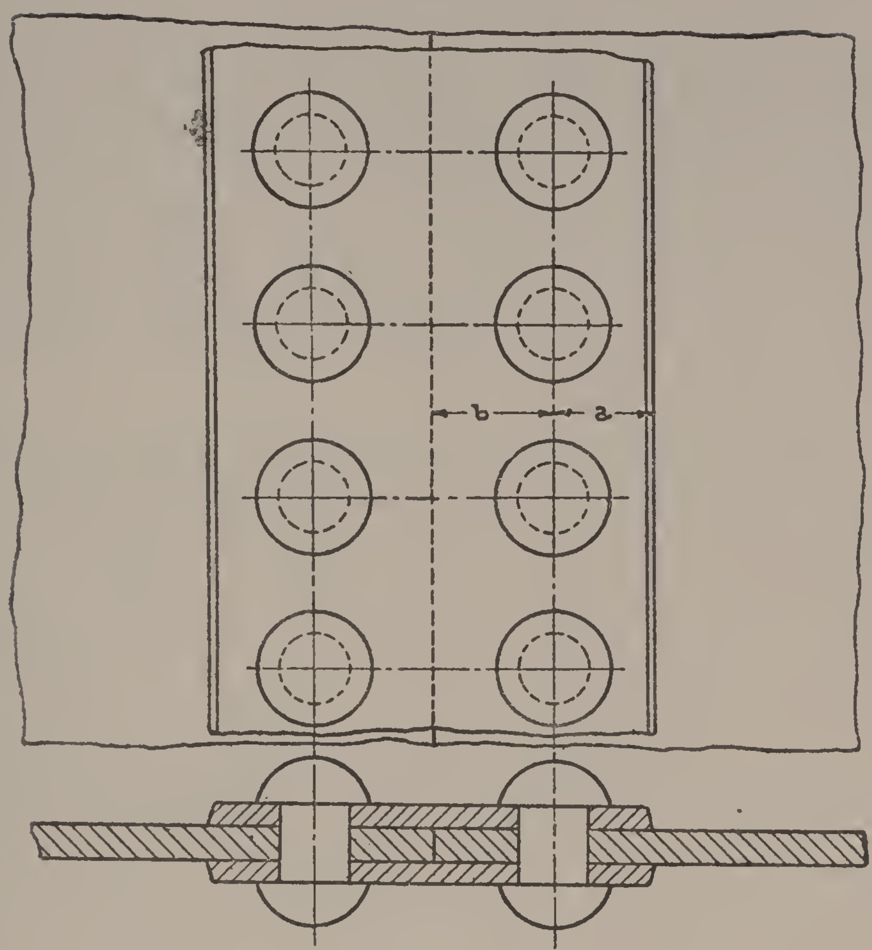

Fig. 6.

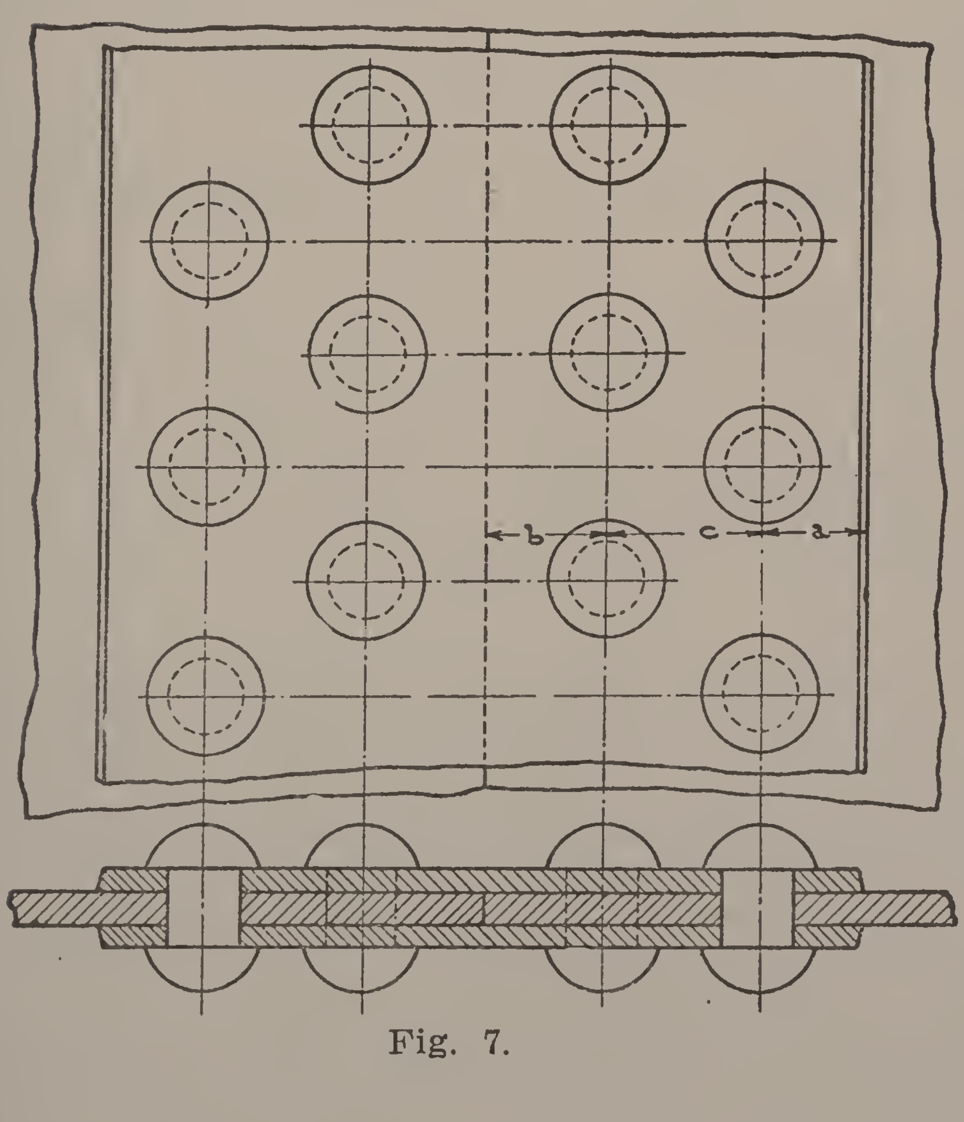

Fig. 7.

BUTT JOINTS.

24. When plates are secured together with straps called BUTT STRAPS, also WELT STRAPS, as shown in Fig. 6, the joint is called a SINGLE-RIVETED DOUBLE-STRAPPED BUTT JOINT. It is single riveted for the reason that the severing of one row of rivets severs the joint – that is, the plates heretofore fastened together can be readily separated. If only one butt strap is used, either inside or outside, the joint is a SINGLE-RIVETED SINGLE-STRAP JOINT, but this form of riveted joint is not extensively used.

In Figs. 7 and 8 two forms of riveted joints are shown – both are called DOUBLE-RIVETED DOUBLE-STRAPPED BUTT JOINTS. When the riveted joint, Fig. 8, is meant it is usually designated by stating the inner strap extended. In Figs. 9 and 10 two types of riveted joints are shown. Both are called TRIPLE-RIVETED DOUBLE-STRAPPED BUTT JOINTS. The construction is similar to the joints Figs. 7 and 8, except one additional row of rivets on each side of the butt joint is added. In Fig. 11 is shown a riveted joint, called a DOUBLE-STRAPPED QUADRUPLED-RIVETED BUTT JOINT. It is constructed so that the inner strap extends sufficiently to permit four rows of rivets on each side of the butt joint, but only two rows of rivets are in both the inner and outer straps. The two outside rows of rivets, as shown in Fig. 11, fasten the inner strap to the shell only. This type of joint must be made as nearly equal to the strength of the solid plate as possible. There are many types of riveted joints, but those shown, Figs. 3 to 11 inclusive, are the types of riveted joints generally employed.

CONSTRUCTION AND FAILURE OF RIVETED JOINTS.

EFFICIENCY.

25. The EFFICIENCY of a riveted joint is the lowest per cent of its several parts. The pitch of the rivets, which is the distance from the center to the center of the rivets, is 100 per cent. It matters not the pitch, the percentage is 100. When holes are installed into the plate a certain amount of plate is removed, therefore the resistance that is to resist the stress acting on the shell, is the resistance offered by the net sections of plate left between the rivet holes.

26. If a plate one inch thick has rivets, 4-inch pitch, the 4-inch pitch representes 100 per cent. The area of the plate in this case is: $4 \times 1 = 4$ square inches. If the tensile strength is 60,000 pounds, then the 4 square inches has a resisting force of $4 \times 60{,}000 = 240{,}000$ pounds. Were holes one inch in diameter installed into the plate the distance from the edge of one rivet hole to the adjoining rivet hole would be $4 - 1 = 3$ inches. It will be seen that one inch of metal having been removed the resisting force is reduced.

The section of plate between the rivet holes is called the NET SEC-

TION PLATE, and if the rivet holes are laid off uniform, as they should be, each and every section will be alike, therefore what is the efficiency for one section is the efficiency for all like sections. The efficiency of the net section of plate is not decided by its thickness, or by its tensile strength, but by the pitch and the size of the rivet hole. With a 4-inch pitch and 1-inch rivets, the efficiency of the net section of plate may be found by the following formula:

Where:

P = Pitch of rivets in inches from centers to center.
D = Diameter of rivet holes in inches.
E = Efficiency.

$$\frac{P - D}{P} = E, \text{ or } \frac{(4 - 1) \times 100}{4} = 75 \text{ per cent.}$$

27. Assuming the pitch to be 3-inch, and 1-inch rivet holes, then the efficiency will be:

$$\frac{P - D}{P} = E, \text{ or } \frac{(3 - 1) \times 100}{3} = 66.66 \text{ per cent.}$$

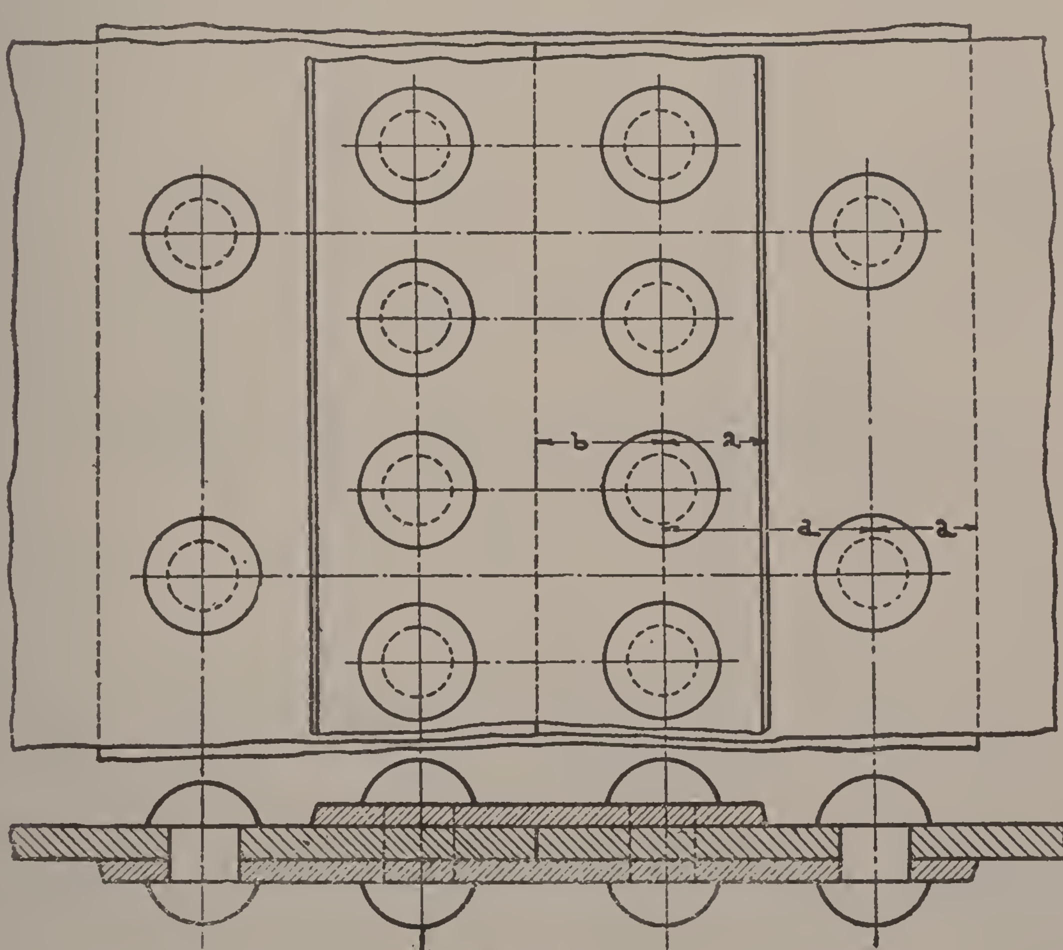

Fig. 8.

As will be seen it amounts to subtracting from the pitch the diameter of the rivet and dividing the product by the pitch. The examples further show that the greater the pitch the greater the length

of the net section of plate; hence more resistance, also greater efficiency. Further still, the examples show that the larger the diameter of the rivet the more metal removed, and a corresponding reduction in the resistance of the net section of plate, also efficiency.

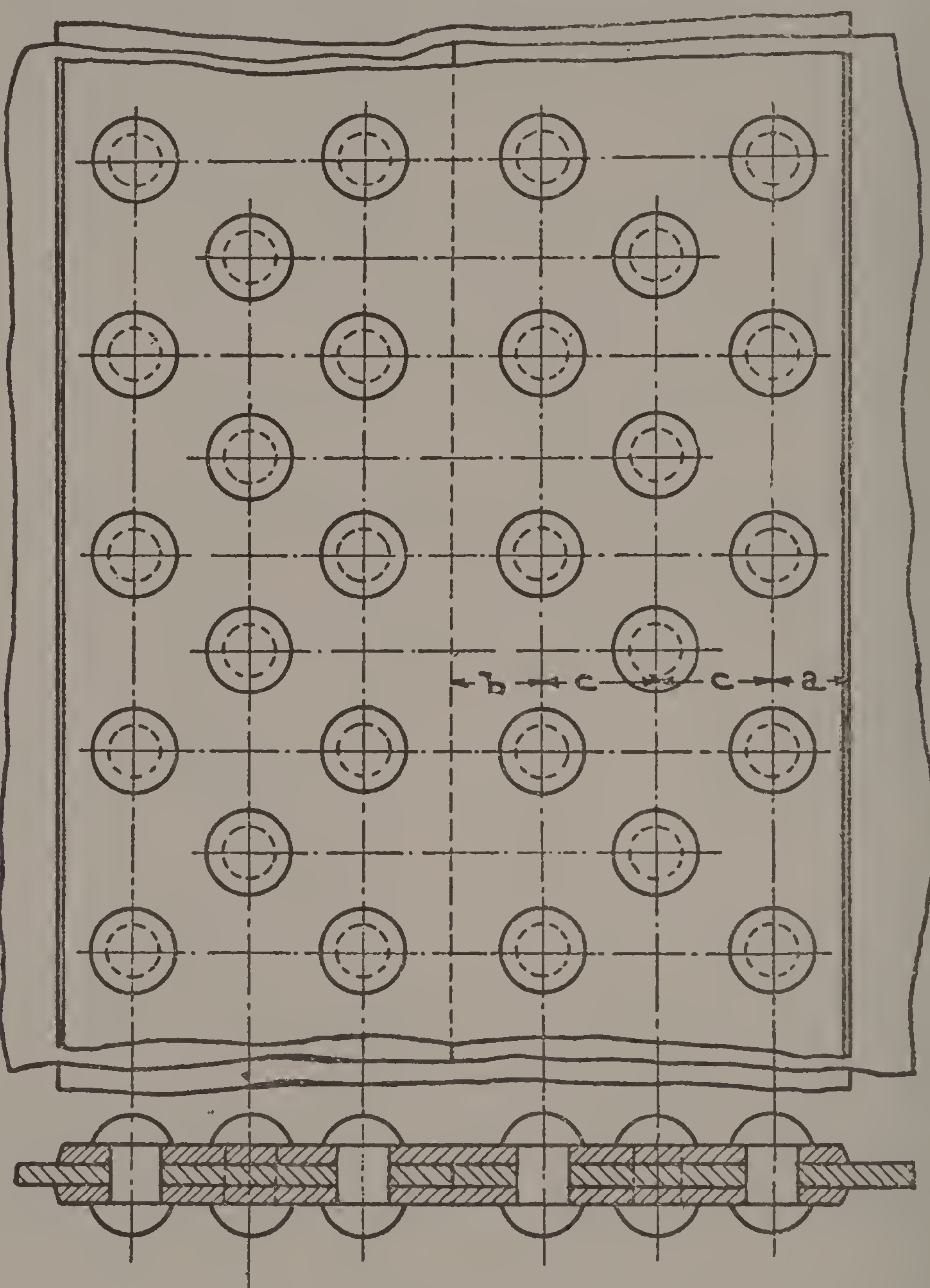

Fig. 9.

28. A stress acting on a riveted joint does not act solely upon the net sections of plate. It also acts upon the rivets. The strength of the rivets compared to the plate must be ascertained. If weaker than the net section of plate, then the efficiency of the joint is decided by the strength of the rivets. If stronger than the net section of plate, then the efficiency of the latter is the efficiency of the joint.

SHEARING STRENGTH OF RIVETS.

29. The shearing strength of a rivet does not depend solely upon the metal of which the rivet is composed and its size. The manner

in which the rivet is installed is very important. If the rivet is installed in a single riveted lap joint, as shown in Fig. 3, then the rivet is in single shear. The expression in SINGLE SHEAR means severing the rivet, as shown in Fig. 12. The shearing strength of a rivet is found by multiplying its area by the shearing strength per square inch. The expression in DOUBLE SHEAR means the severing of the rivet at two places at one and the same time, as shown in Fig. 13. The rivets in a single-riveted butt joint, as shown in Fig. 4, are in double shear.

30. Notwithstanding that a rivet in double shear has twice as great an area as a rivet in single shear, tests have brought out that a rivet in double shear will shear when subject to a force not quite twice as great as the force required to shear a rivet in single shear. Generally figuring the force required to shear a rivet in double shear is 1.85 times the force required to shear a rivet in single shear.

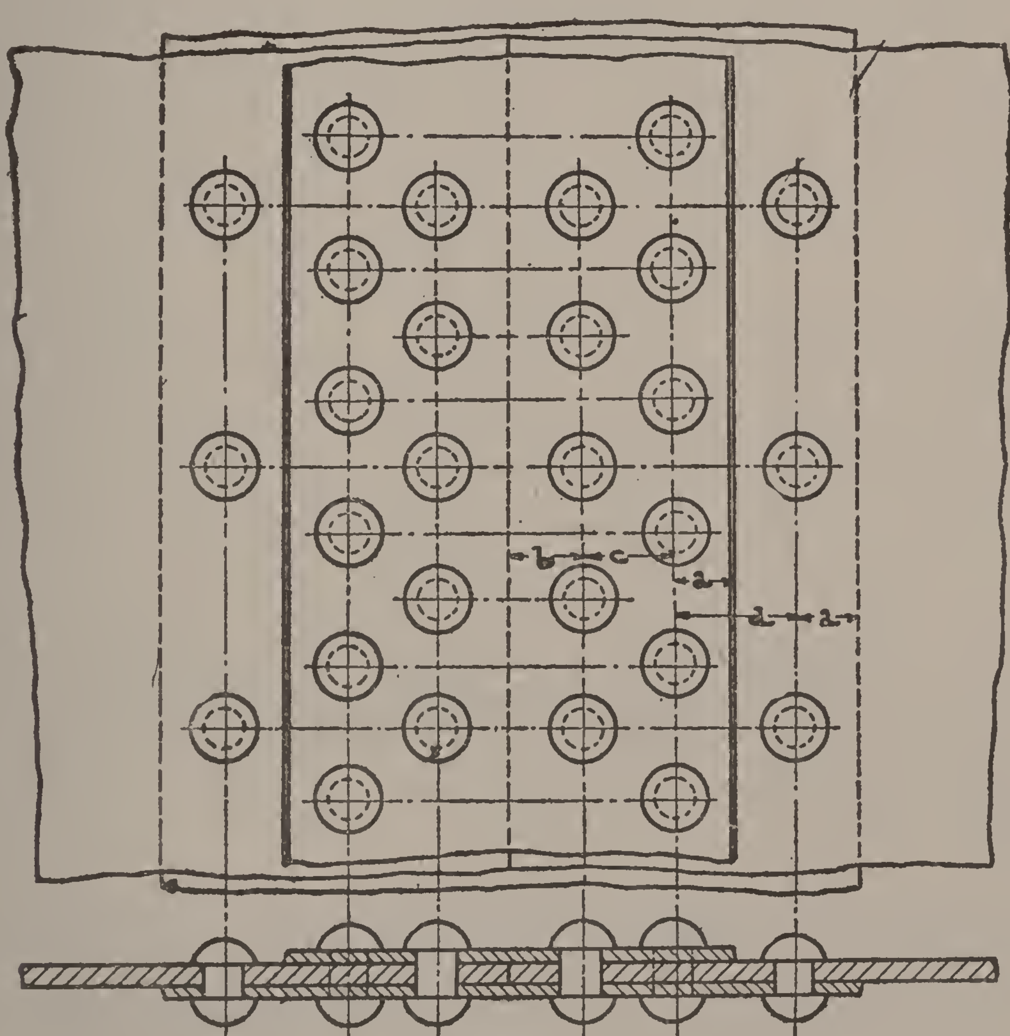

Fig. 10.

31. However, the Master Steam Boiler Makers' Association, now the International Master Boiler Makers' Association, conducted a number of tests, and in 1906 moved, seconded and unanimously carried to make the following recommendations:

Iron rivets in single shear, 42,000 pounds shearing strength per square inch.

Steel rivets in single shear, 45,000 pounds shearing strength per square inch.

Iron rivets in double shear, 80,000 pounds shearing strength per square inch.

Steel rivets in double shear, 88,000 pounds shearing strength per square inch.

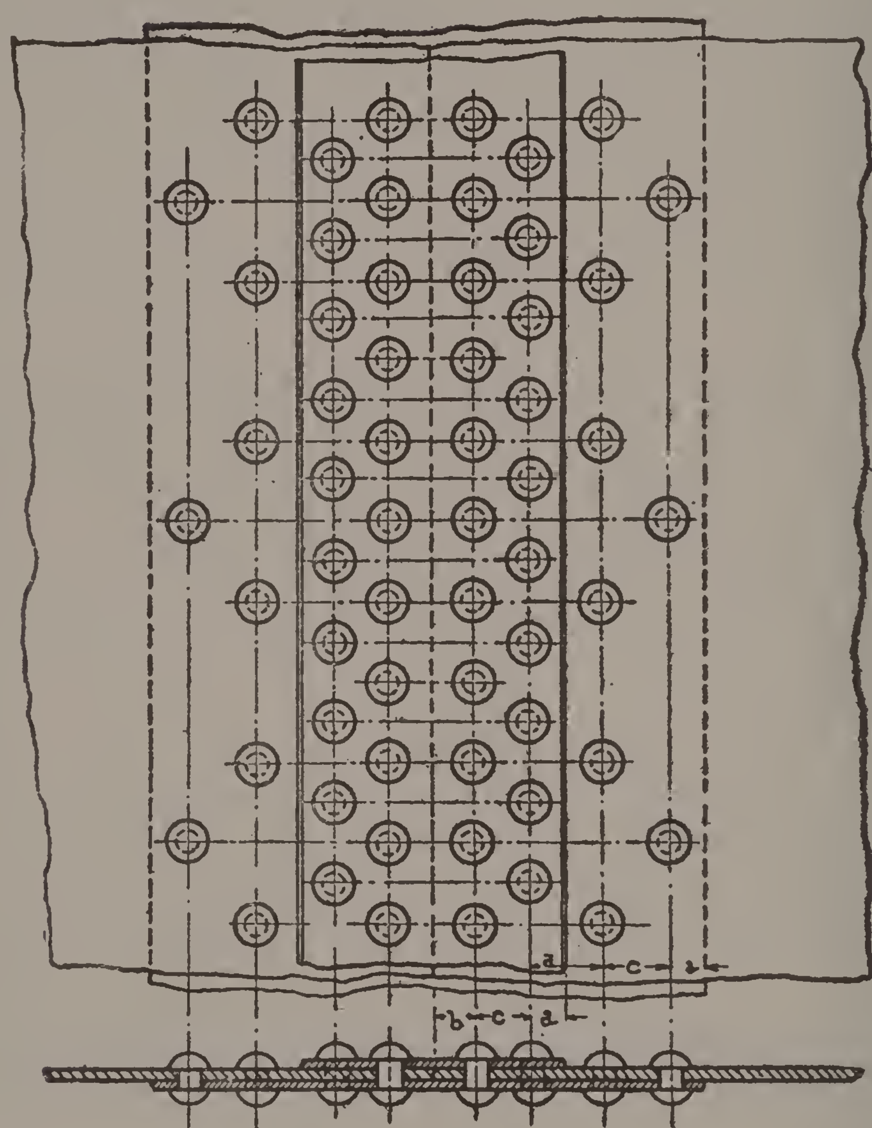

Fig. 11.

If steel rivets were used in the riveted joint, Art. 26, the efficiency will be the strength of one rivet divided by the strength of the plate, or

$$\frac{1 \times 1 \times .7854 \times 45{,}000 \times 100}{4 \times 60{,}000} = 14.7 \text{ per cent}$$

32. The efficiency of the plate in the example, Art. 26, is 75 per cent, while the rivet efficiency is found to be only 14.7 per cent, therefore the efficiency of the joint is the latter efficiency. To increase the efficiency of the rivet one or more of the following must be done: Reduce the pitch of the rivets; use a larger rivet; or use a lighter plate.

To reduce the pitch increases the rivet efficiency, but reduces the efficiency of the net section of plate. To use a larger size rivet increases the rivet efficiency and reduces the efficiency of the net section of plate — there being no change in the rivet pitch. To use a lighter plate, without change in either the rivet pitch, or change in the size of the rivet, does not alter the plate efficiency, but increases the rivet efficiency and reduces the allowable working pressure, and because a reduction in the thickness of the boiler shell means a reduction in the resistance of the net section of plate.

33. In Art. 27 the pitch is given as 3 inches, and the efficiency of the rivets, using steel rivets, is:

$$\frac{1 \times 1 \times .7854 \times 45{,}000 \times 100}{3 \times 60{,}000} = 19.6 \text{ per cent}$$

The foregoing examples set forth clearly that a 1-inch rivet is too small with 4-inch rivet pitch. Aside from the steam-tight joint, the joint is not allowable due to the low efficiency of the rivets. Reducing the pitch from 4-inch to 3-inch makes only a slight increase in the rivet efficiency; hence the remedy lies in employing additional rows of rivets.

Maintaining the 3-inch pitch, which as set forth in Art. 27, gives a plate efficiency of 66.66 per cent, the addition of another row of rivets, thus making a double-riveted lap joint, increases the shearing resistance of the rivets twice, or makes the efficiency $2 \times 19.6 = 39.2$ per cent. By adding another row of rivets, thus making the joint a triple-riveted joint, the rivet efficiency is further increased and is: $3 \times 19.6 = 58.6$ per cent.

The calculations, however, show that the plate efficiency is greater than the rivet efficiency, thus another row of rivets must be added, or a larger size rivet used, or the plate reduced in thickness, or the pitch reduced. In designing a riveted joint the aim at all times should be to make the net section of plate the weakest part of the riveted joint.

PITCH OF RIVETS.

34. The pitch of the rivets can not be decided solely from one source. The pitch must not be excessive so that difficulty will be experienced in keeping the seam and rivets steam-tight. The pitch depends upon the size of the rivet; thickness of plate and type of riveted joint. The more rows of rivets in a riveted joint the greater the pitch allowable. However, there are approximate pitches, but there is no set standard, or any hard and fast rule governing the pitch of rivets.

The old time-honored rule of making the diameter of the rivet about twice as great as the thickness of plate, works well enough in places,

but with heavy plate such a rule is worthless. No one would think of using such a rule if the shell plate was 1½ inches thick. Other rules similar in nature to decide the pitch are unreliable. The correct way is to figure out each part and construct the joint so that its weakest part is the net section of plate, maximum pitch. Trial pitches may, however, be found by the following:

Where:

T = Thickness of plate in inches.
P = Maximum pitch of rivets.
C = Constant applicable from table.

TABLE I.

Rows of rivets	Constants for lap joints	Constants for double-strapped butt joints
1	1.31	1.75
2	2.62	3.50
3	3.74	4.63
4	4.14	5.52

$$(C \times T) + 1\tfrac{5}{8} = P.$$

With a single-riveted lap joint as shown in Fig. 3, the maximum pitch with a maximum pitch with a $\frac{3}{8}$-inch plate would be: 1.31 (constant) × .375 (thickness of plate in inches – expressed decimally) equals .49125. To this add $1\frac{5}{8}$, or as expressed decimally, 1,625, making the maximum pitch 2.11625 inches, which is about $2\frac{1}{8}$ inches.

The constants for double-strapped butt joints are intended for only the pitch of rivets in double shear. For instance the constant for the triple-riveted double double strapped butt joint (Fig. 9) is 4.63 while the constant for the triple-riveted double-strapped butt joint (Fig. 10) is 3.50.

DISTANCE FROM THE CENTER OF THE RIVET HOLE TO THE EDGE OF THE PLATE.

35. The distance from the center of the rivet hole to the edge of the plate is called the LAP, though technically the expression erroneous. The lap proper is twice the distance, *a*, (Fig. 3). To make no departure from shop terms, all reference to the lap will mean the distance from the center of the rivet to the edge of the plate.

Though there are a vast number of rules, etc., for figuring out the lap, tests have been brought out that making the lap *a*, (Figs. 3 to 11 inclusive), $1\frac{1}{2}$ times the diameter of the rivet hole is sufficient to prevent the plate from either shearing or crushing in front of the rivet; hence, all calculations to the amount of the lap amounts to practically nothing. However, the exception is the riveted joint (Figs. 6 and 8). The distance *b* should be made at least $1\frac{3}{4}$ times, preferably

2 times, the diameter of the rivet hole. The distance *b* (Figs. 7, 9, 10 and 11), should never be less than $1\frac{1}{2}$ times, preferably $1\frac{3}{4}$ times, the diameter of the rivet hole.

DISTANCE BETWEEN ROWS OF RIVETS.

36. The distance between rows of rivets of a riveted joint depends upon its construction. The distance should not be so excessive as to permit the plate to spring between the rivets. On the other hand the distance should not be so small that the rivet set, or rivet die, when driving a rivet, will come in contact with and disfigure an adjoining rivet previously driven.

The distance between the rows of rivets as designated by the letter *c* (Figs. 4, 5, 7, 9, 10 and 11), should not exceed three times the diameter of the rivet hole, and should not be less than 2 times the diameter of the rivet hole. In the double-strapped butt riveted joint with inner strap extended, as shown in Figs. 8, 10 and 11, the distance *d* should be sufficient to not only permit the rivets being readily

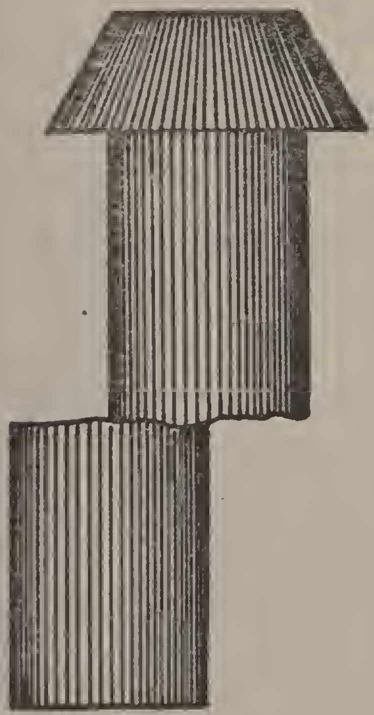

Fig. 12.

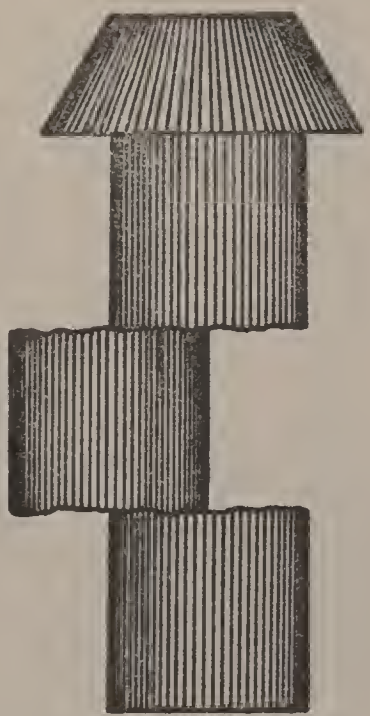

Fig. 13.

driven, but also to permit the outer butt strap to be easily calked at all points. The distance is rarely made greater than 4 times the diameter of the rivet hole, or less than 3 times the diameter of the rivet hole. In the quadruple butt joint, double-strapped and with inner strap extended, the distance *e* (Fig. 11), should be made not less than $2\frac{1}{2}$ times, and not to exceed $3\frac{1}{2}$ times, the diameter of the rivet hole.

PROPORTIONS OF PARTS OF RIVETED JOINTS.

37. To attempt to design a riveted joint, particularly a double-strapped butt joint, so that all parts are about equal, is out of all question, but with lap joints, single, double and triple-riveted, the efficiency of the net section of plate and efficiency of the rivets will often be nearly alike – sometimes varying only 1 per cent.

However, with a double-strapped butt joint many of the rivets are in double shear – in some double-strapped butt joints all the rivets are in double shear – see Figs. 7 and 9 – and the rivet efficiency of such joints is generally many per cent greater than the efficiency of the net section of plate.

The rivets in the riveted joints, as shown in Figs. 8 and 10, are part in single shear and part in double shear. This requires that the efficiency of the set section of plate between the inner row of rivets and the efficiency of the rivet in single shear be added together to ascertain if their strength is as great as the strength of the net section of plate, maximum pitch of rivets.

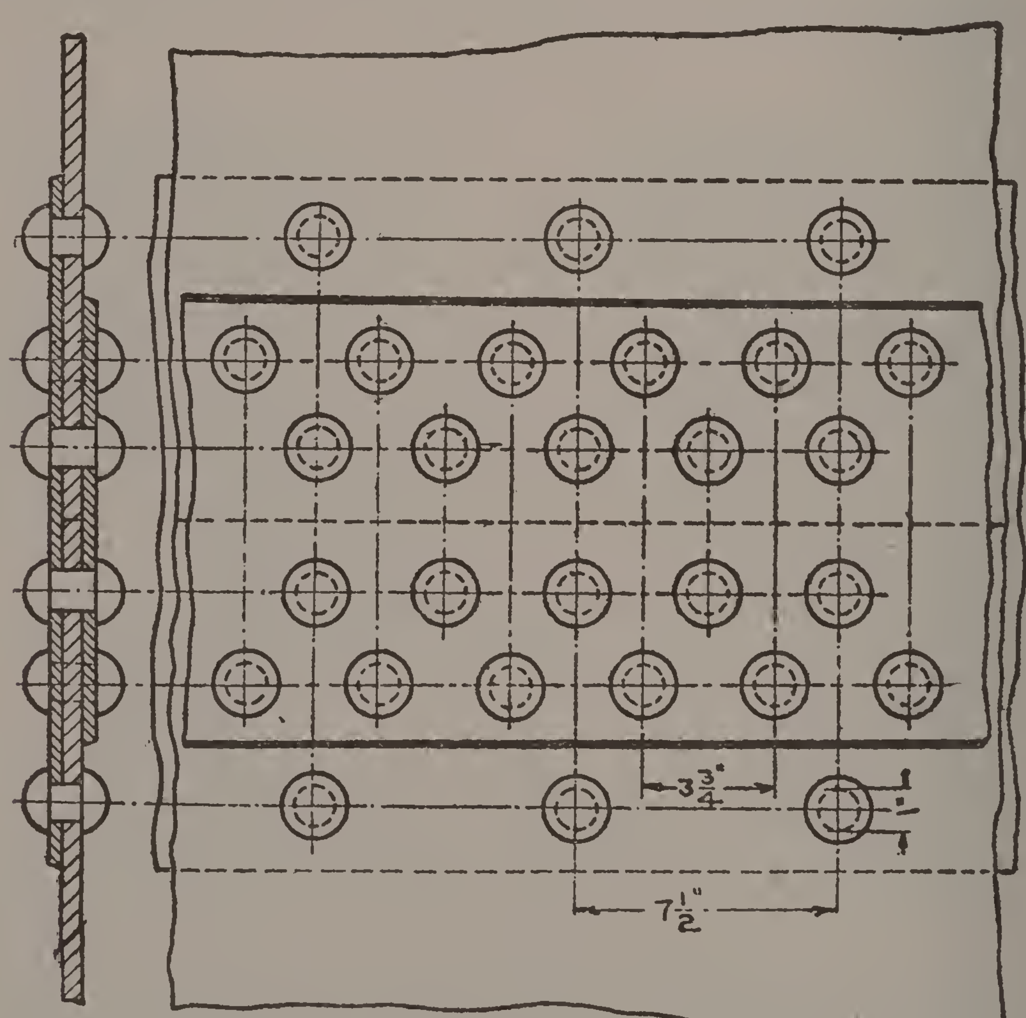

Fig. 14.

The foregoing is clearly brought out in the triple-riveted joint, as shown in Fig. 14. The following is the specification for the riveted joint: Maximum pitch 7½ inches; minimum pitch 3¾ inches; diameter

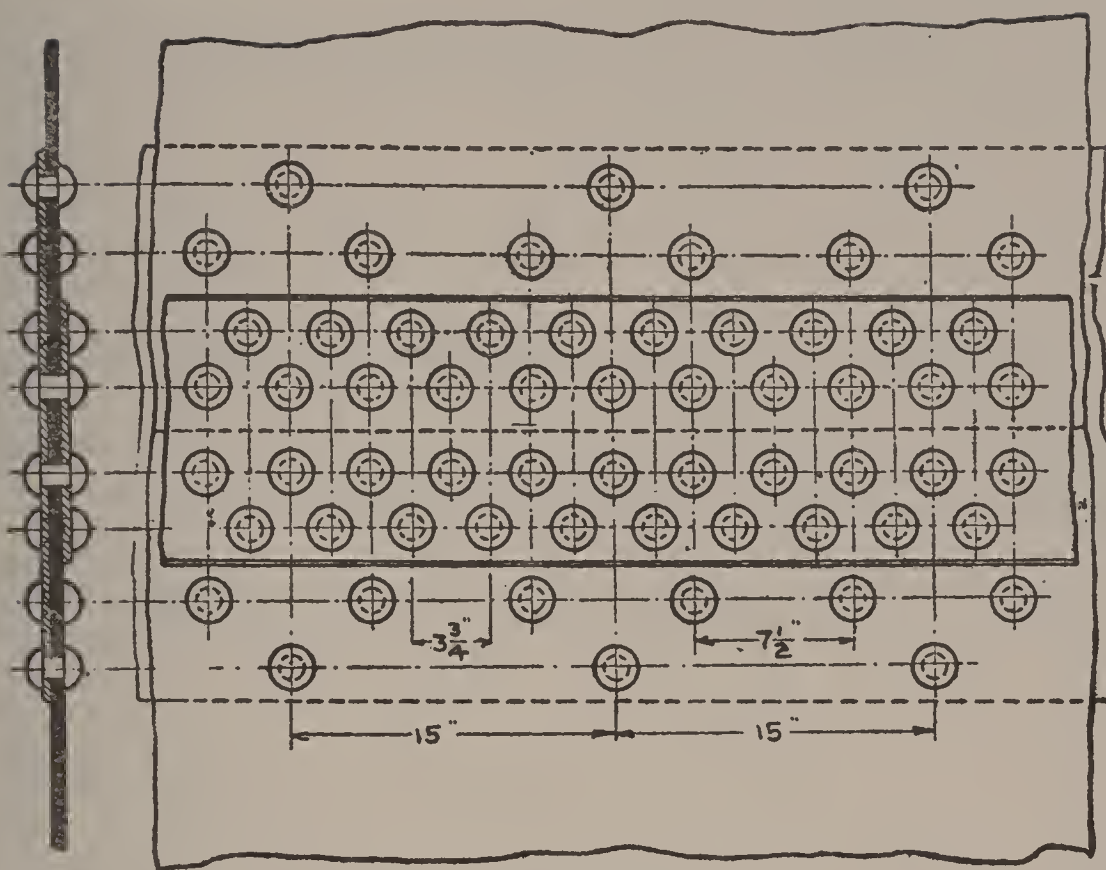

Fig. 15.

of rivet hole 1 inch; thickness of plate ½ inch; tensile strength of plate 60,000 pounds, and shearing strength of steel rivets, 45,000 pounds

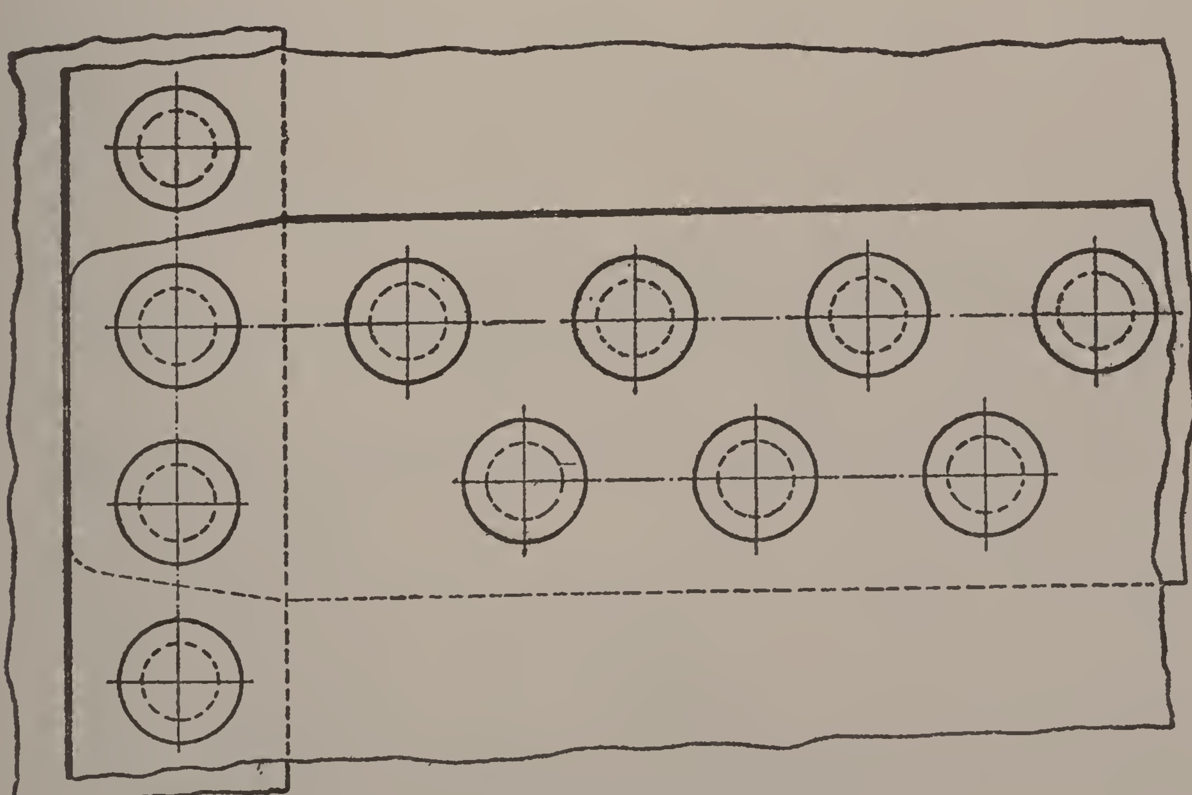

Fig. 16.

per square inch for rivets in single shear, and 88,000 pounds per square inch for rivets in double shear.

Since the maximum pitch of rivets is $7\frac{1}{2}$ inches and the diameter of the rivet hole is 1 inch, the length of the net section of plate will be $7\frac{1}{2} - 1 = 6\frac{1}{2}$ inches. The efficiency is:

$$\frac{6.5 \times 100}{7.5} = 86.6 \text{ efficiency}$$

38. To determine if the net section of plate, maximum pitch, is the weaker of all parts, requires that the other parts be computed. Reference to Fig. 14 shows that the pitch of rivets of the inner rows is $3\frac{3}{4}$ inches. The efficiency of the net section of plate of the inner rows may be computed two ways, as follows:

First: Subtract from the maximum pitch (in this case $7\frac{1}{2}$ inches) the diameter of two rivet holes, or $7\frac{1}{2} - 2 = 5\frac{1}{2}$ inches. Then the efficiency is:

$$\frac{5.5 \times 100}{7.5} = 73.3 \text{ efficiency}$$

Second: Subtract from the minimum pitch (in this case $3\frac{3}{4}$ inches) the diameter of one rivet hole, or $3\frac{3}{4} - 1 = 2\frac{3}{4}$ inches. Then the efficiency is:

$$\frac{2.75 \times 100}{3.75} = 73.3 \text{ efficiency}$$

39. For the riveted joint to fail by rupture through the net section of plate of the inner row of rivets, the rivet in the outer row must be sheared, therefore its efficiency is to be added to the efficiency of the net section of plate, minimum pitch. The efficiency of the rivet may be found by the formula.

Where:

N = Number of rivets in shear.
TS = Tensile strength of plate in pounds per square inch.
T = Thickness of plate in inches (express decimally).
P = Pitch of rivets.
SS = Shearing strength of rivest in pounds per square inch.
A = Area of one rivet.
E = Efficiency.

$$\frac{A \times SS \times N}{TS \times T \times P} = E,$$

$$\frac{.7854 \times 45{,}000 \times 1 \times 100}{60{,}000 \times .5 \times 7.5} = 15.7 \text{ efficiency.}$$

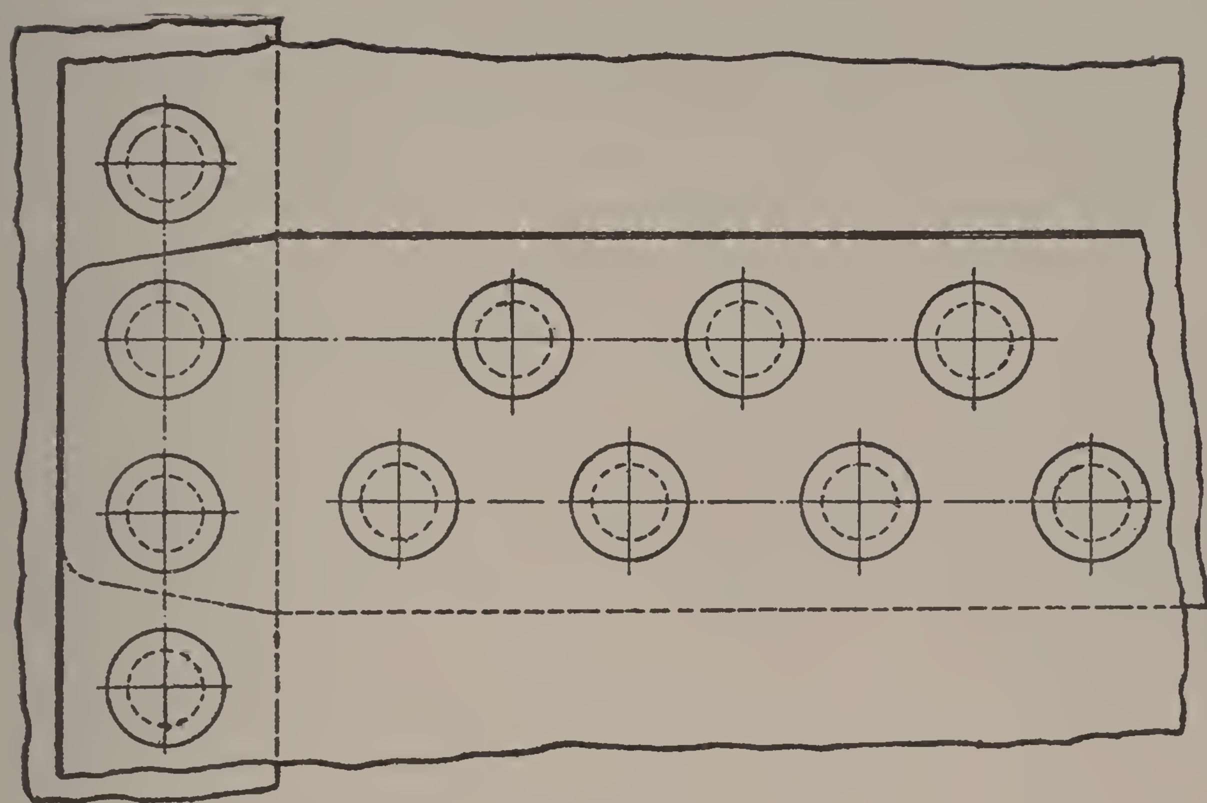

Fig. 17.

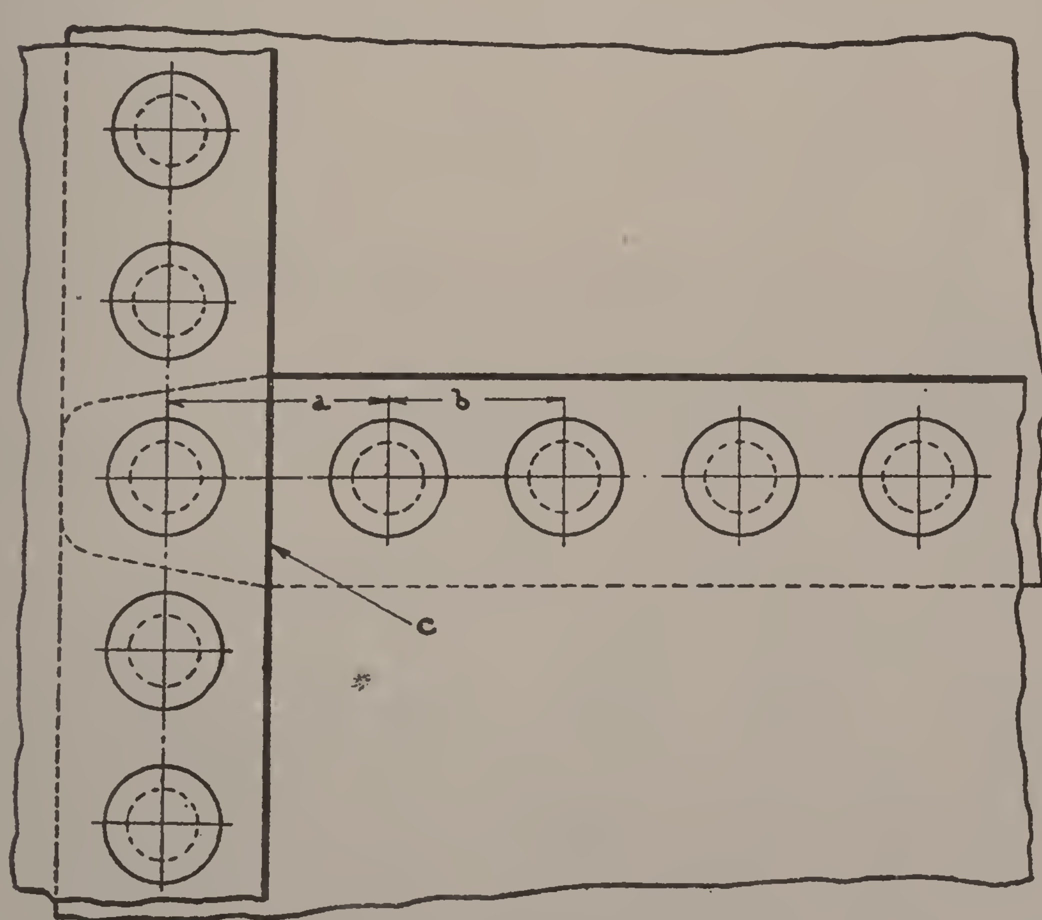

Fig. 18.

40. Thus $73.3 + 15.7 = 89$ efficiency, which exceeds by over 2 per cent the efficiency of the net section of plate, maximum pitch. Had iron rivets, which, according to Art. 31, have a shearing strength of 42,000 pounds per square inch, been used in place of steel rivets, then the efficiency of the rivet in single shear would be less, and because its shearing strength is less. Assuming iron rivets were used, the efficiency would be:

$$\frac{42{,}000 \times .7854 \times 100}{60{,}000 \times .5 \times 7 \times 7.5} = 74.6 \text{ efficiency}$$

Thus $73.3 + 14.6 = 87.9$ efficiency – say 88 efficiency, which is also greater than the efficiency of the net section of plate maximum pitch. The foregoing calculations show (in this case) that with either iron or steel rivets the combined efficiency of the net section of plate, minimum pitch, and the efficiency of the rivet in single shear, is greater than the efficiency of the net section of plate, maximum pitch. It further brings out that a change in the shearing strength of 3,000 pounds does, in this case, reduce the efficiency 1 per cent. Had the combined efficiency of the net section of plate and rivet in single shear only exceeded, using steel rivets, the efficiency of the net section of plate, maximum pitch, by less than 1 per cent, it will be seen that by using iron rivets the combined efficiency would be less than the efficiency of the net section of plate, maximum pitch, and this being true, the efficiency of the joint insofar as calculated at present would be the combined efficiency of the two parts. As the calculation, both with iron and steel rivets, shows that the combined efficiency exceeds the efficiency of the net section of plate, maximum pitch, the efficiency of the latter is the efficiency of the riveted joint, insofar as calculated.

41. To determine if the riveted joint may fall by shearing all the rivets, their efficiency, both the rivets in single shear and double shear, must be ascertained. Inspection of Fig. 14 shows that within the maximum pitch there are four rivets in double shear and one rivet in single shear. The efficiency with steel rivets in double shear is:

$$\frac{4 \times .7854 \times 88{,}000 \times 100}{60{,}000 \times .5 \times 7.5} = 122.87 \text{ efficiency}$$

As will be seen the efficiency of the rivets in double shear is considerable more than the efficiency of the net section of plate, maximum pitch. To the 122.87 efficiency is to be added the efficiency of the rivet in single shear which, according to Art. 39, is 15.7, thus making the total efficiency to $122.87 + 15.7$, or 138.57 efficiency.

42. A remote mode of failure of the riveted joint is for the butt straps, both inside and outside straps, to fracture through the net sec-

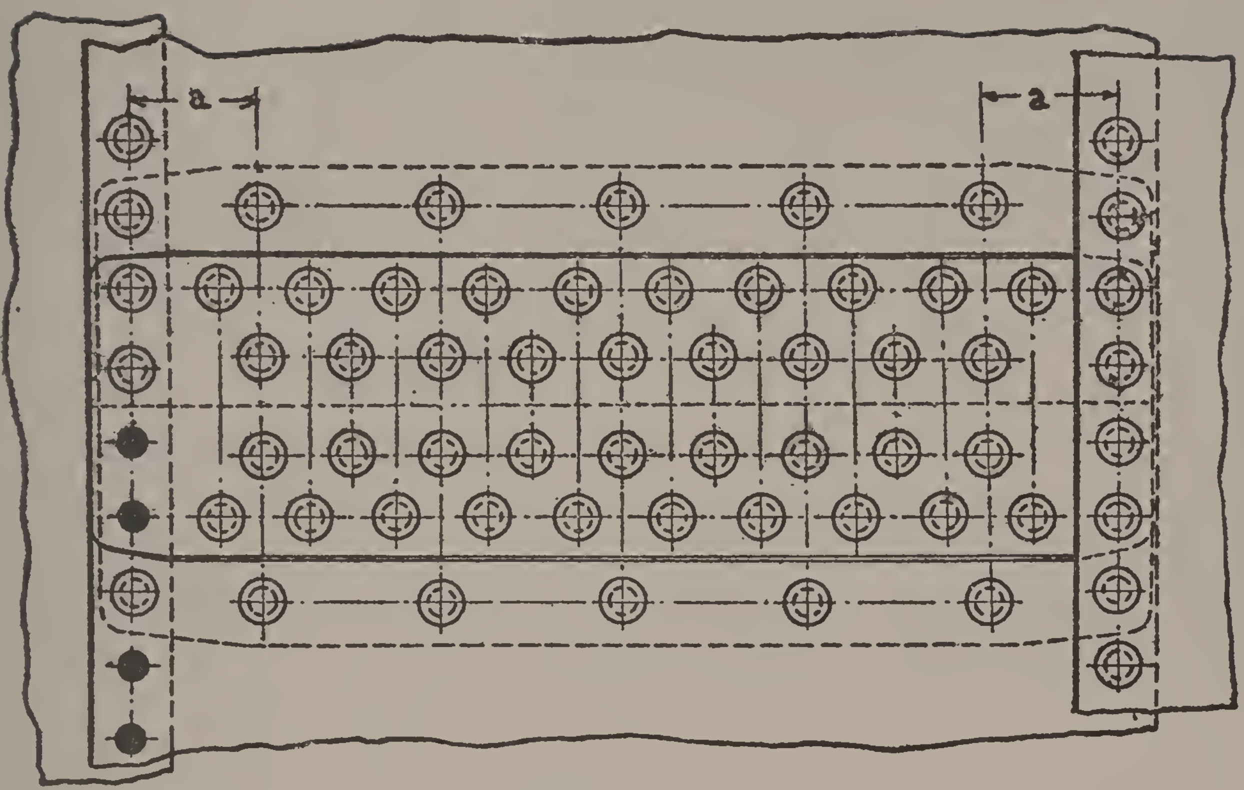

Fig. 19.

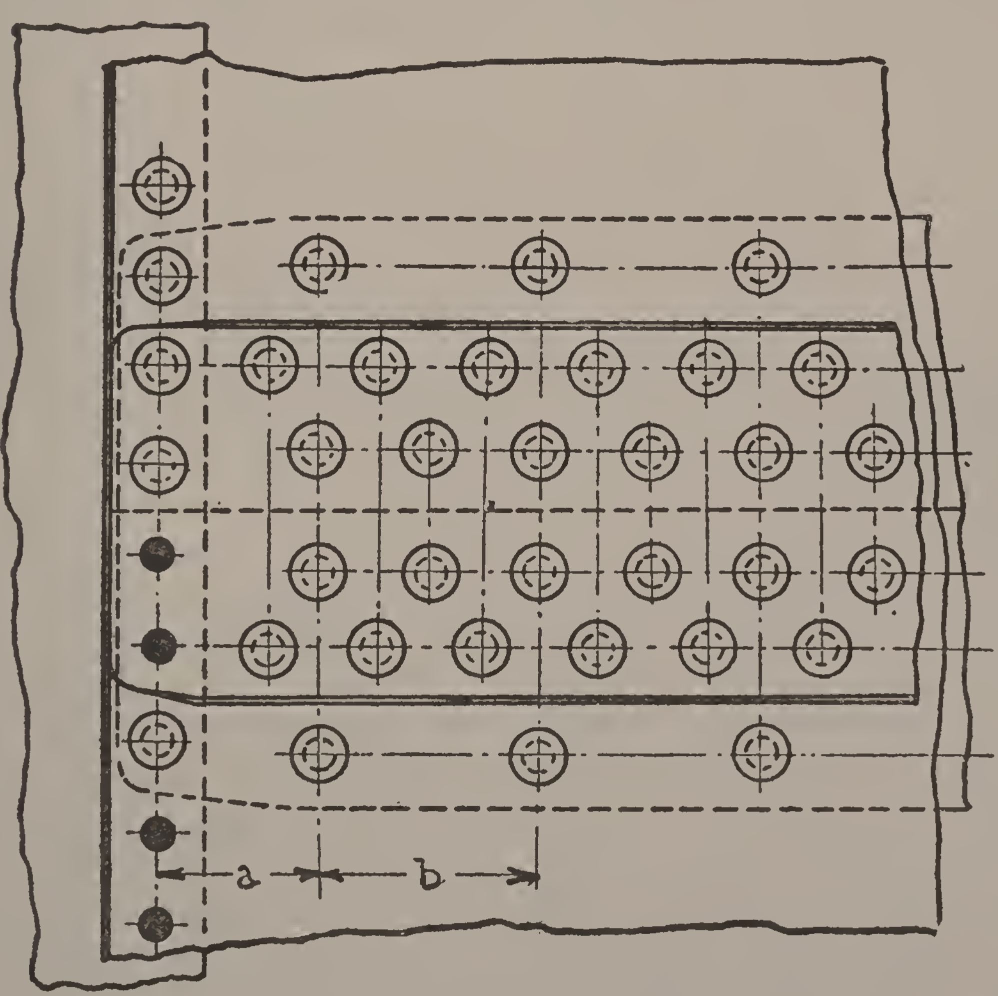

Fig. 20.

tion of plate, minimum pitch. If the least thickness of the butt straps is made equal to three-fourths of the thickness of the shell plate, the thickness is sufficient as far as strength is concerned. However, with light shell plates the outer strap should be as thick, and in some cases thicker, than the shell plate, and for the reason that a light butt strap is liable to spring between the rivets unless calked very carefully. Some boiler manufacturers, regardless of the thickness of the shell plate, make the outer strap the same thickness.

VALUE OF RIVET IN SINGLE SHEAR.

43. The value of the rivet in single shear of the riveted joint (Fig. 14) is apparent, for, were the outer row of rivets to be omitted the joint would then be a double-strapped joint (Fig. 7). According to the calculations of the net section of plate (Fig. 14) as given in Article 38, its efficiency is 73.3, therefore the rivet is single shear and has a large bearing on the efficiency.

If the dropping of the outer row of rivets reduces the efficiency several per cent then the adding of another row should tend to increase the efficiency; hence, the double-strapped quadruple-riveted butt joint, as shown in Fig. 15. As will be seen Fig. 15 is the riveted joint, Fig. 14, with an additional row of rivets in single shear. The rivets are arranged so that the maximum pitch is 15 inches, creating a greater length of net section of plate. The efficiency is:

$$\frac{(15-1)\times 100}{15} = 93.3 \text{ efficiency}$$

Since the efficiency of the 1-inch steel rivet, $7\frac{1}{2}$-inch pitch, was found in Art. 39 to be 15. 7 per cent, the efficiency, 15-inch pitch, may be found by proportion, which, in this case, is 2 to 1; hence the efficiency of the rivet in single shear, maximum pitch or 15-inch pitch, is $15.7 \div 2 = 7.85$ per cent.

This may also be found as follows:

$$\frac{.7854 \times 45{,}000 \times 100}{60{,}000 \times .5 \times 15} = 7.85 \text{ efficiency}$$

Adding the efficiency (7.85) to the efficiency of the net section of plate, $7\frac{1}{2}$-inch pitch, which, according to Art. 37, is 86.6 per cent, makes the combined efficiency of the net section of plate, $7\frac{1}{2}$-inch pitch, and one rivet in single shear, $86.6 + 7.85 = 94.45$ efficiency. As 94.45 efficiency exceeds the 93.3 efficiency of the net section of plate, 15-inch pitch, as given in Art. 43, the efficiency of the riveted joint (Fig. 15) is 93.3 per cent; the efficiency of the riveted joint (Fig. 14) is 86.6 per cent.

PRACTICAL CONSIDERATIONS WHEN DESIGNING A RIVETED JOINT.

45. With double-riveted lap joints an item that must be taken into consideration is to have the arrangement of the rivets such that pitch adjoining the calking edge is uniform. The rivets should be arranged, as shown in Fig. 16, and never as shown in Fig. 17. The difference in the respective arrangement of the rivets is that in Fig. 16 the greater number of rivets are in the outer two, while in Fig. 17 the reverse exists. With a single-riveted lap- joint it is customary to make the pitch *a* (Fig. 18) greater than the pitch *b*. This is done to permit the rivet to be readily inserted and driven, and also to permit the seam *c* to be readily calked.

46. When a triple-riveted double-strapped butt joint, as shown in Fig. 19 is used the overall distance between the girth seams plays no little part in the maximum pitch. Theoretical calculations are many times badly upset, and all arisings from the fact that the overall distance between the girth seams may be such that the pitch selected can not be used. In Fig. 19 is given a concrete case, and, as will be noted, the even number of rivets are in the outer row, per minimum pitch, thereby permitting the rivets in single shear to be so arranged that the distance *a* is alike at both ends.

Were one rivet added, or one rivet subtracted then the outer row of rivets, minimum pitch, would have an odd number of rivets, which would not permit arranging the rivet in single shear so that the distance *a* would be alike at both ends—and, needless to say, the joint would be anything but properly proportioned. The foregoing brings out that the pitch may have to be altered, as the selected pitch may cause an odd number of rivets in the outer row, minimum pitch, and if this is the case another rivet must be added, decreaseing the pitch, or one rivet subtracted, increasing the pitch.

47. The reason the distance *a* (Fig. 20), which is less than the distance *b*, is not computed is due to the fact that it derives assistance from the rivets in the girth seam. For the rupture to start through section *a* the marked rivets in the girth must be sheared, therefore the force must not only break the net section of plate, but also shear the rivets in the girth seam. The assistance that the net section of plate derives from two rivets only, is generally sufficient to make its strength greater than the net section of plate *b*.

FACTOR OF SAFETY.

48. In the riveted joints figured out the supposition has been that the factor of safety was standard. However, the plate, depending upon how the rivet holes are installed, may have a different factor of safety than the rivets. If the rivet holes are drilled, the plate should have a lower factor of safety than if the holes are punched. Whether

the rivet holes are punched or drilled has no marked bearing on the rivets, therefore, they may have a set or standard factor of safety. While it is true that rivets in punched holes show a greater shearing strength than rivets in drilled holes, this is due to the greater area.

49. Let it be understood that the plate's variable factor of safety is due to the manner of installing the rivet holes, also the condition of the holes. If unfair, that is, partly blind, a greater factor of safety is applied. Due to the foregoing it is possible for a riveted joint, especially a lap joint, leaving the rivet efficiency less than the net section of plate to permit a greater working pressure than the net section of plate with a greater efficiency.

For instance: If the efficiency of the net section of a triple-riveted lap joint is 75 per cent, factor of safety 5.5, and the rivet efficiency is 73 per cent, factor of safety 5, the working pressure found by the latter will be the greater of the two. In such cases the working pressure must be worked out, per respective efficiencies and factors of safety, and the least sum of the two methods is the allowable working pressure. The following will show the situation very clearly:

50. Assuming the boiler to be 60-inch diameter, ½-inch plate, 60,000 tensile strength, and with triple-riveted lap joint, per respective efficiencies and factors of safety given in Art. 49, the allowable working pressure would be the least of the following:

Plate efficiency.

$$\frac{60{,}000 \times .75 \times 100}{60 \times 5.5} = 136 \text{ pounds working pressure}$$

Rivet efficiency.

$$\frac{60{,}000 \times .73 \times 100}{60 \times 5} = 146 \text{ pounds working pressure}$$

As will be noted the lower efficiency with the lower factor of safety shows a greater working pressure than the higher efficiency with the higher factor of safety. The working pressure allowable in this case is 136 pounds. Some, however, make a mistake and use the low efficiency and high factor of safety, and by so doing the working pressure would figure out:

$$\frac{60{,}000 \times .73 \times 100}{60 \times 5.5} = 132 \text{ pounds working pressure}$$

The need of thoroughly understanding and employing the right factor of safety, when two different factors of safety are used, with the right efficiency, is apparent.

STAYING OF SURFACES

ARRANGEMENT OF STAYS

51. For the purpose of supporting various parts of a steam boiler and other structures, so that deformation of the plates will not take place when subject to a given load, stays and braces are used. Some parts of a steam boiler and other structures are of that shape that the pressure instead of causing distortion of shape, tends to maintain it. Under circumstances of this character, bracing is not required.

Braces may be classified into two kinds, direct and indirect. A direct stay or brace is one that is placed at 90° to the sheet it supports, and an indirect stay or brace is located at other than 90° to the surface it supports. All staybolts, radial bolts and crown bolts should always be at right angles to the firebox sheets, and should be so placed regardless of the angle to which the stays are attached to the outside wrapper sheet, though a boiler properly designed will provide that no indirect stay or brace will have an angle of over 20°.

Every brace should be as direct as possible to the surface it supports; the greater the angle the less load the brace is allowed. The stress per square inch varies according to the material of which the brace is composed, and the manner in which the brace has been constructed. Stay bolts and welded iron braces are allowed by most authorities 6,000 pounds per square inch when subject to a direct pull, while steel braces without welds are allowed by different authorities from 7,000 to 9,000 pounds per square inch when subject to direct pull.

The variation of the allowable stress per square inch is due to the factor of safety, which to some extent is regulated by the size of the brace. The factor of safety stay bolts and braces is greater than the factor of safety of the shell, and ranges from 6 to 10, according to the authorities. The factor of safety of stay bolts and braces is made greater than other parts of the boiler as the braces are subject to corrosion, and are weakened by it more than any other part. The stay bolts, such as used in locomotive boilers and similar types of boilers, are not only subject to the load tending to separate the parts of the boiler which the staybolts supports, but are subject to a vibratory stress, which is caused by the expansion and contraction of the boiler – the vibratory stress breaks the staybolts.

COMPUTING THE AREA.

52. The area of a threaded stay (the staybolt the same diameter throughout its entire length) is computed from the root of the threads,

and not from the outside diameter of the stay bolt. If the threads are turned off along the body of the stay bolt, and slightly below the root of the threads, as they are in a great many instances, then the area is computed from the least diameter at any point throughout the length of the stay bolt.

The area at the root of the threads depends as to the style of thread that has been cut on the stay bolt. A stay bolt having the Sharp V thread will have less diameter at the root than a stay bolt having the United States thread. The diameter of a 1-inch stay bolt, Sharp V thread, is .85567 inch in diameter at the root of the threads, while a 1-inch stay bolt, United States thread, is .89175 inch in diameter at the root of the threads. The difference in diameter is slight, but sufficient to permit one stay bolt to have a greater working stress than the other, though both are 1-inch threaded stay bolts.

53. The area and allowable working stress of a 1-inch threaded stay bolt, United States thread, is as follows:

$1 - .10825 = .89175$ inch in diameter at root of the threads.
$.89175 \times .89175 \times .7854 = 62455$ square inches.
$.62455 \times 6000$ (allowable stress in pounds per square inch) $= 3747$ pounds working stress.

54. The area and allowable working stress of a 1-inch threaded stay bolt, Sharp V thread, is as follows:

$1 - .14433 = 85567$ inch in diameter at root of the threads.
$.85567 \times .85567 \times .7854 = .57504$ square inches.
$.5750 \times 6000 = 6000\ 3450$ pounds working stress.

The difference in the allowable working stress of the foregoing in favor of the stay bolt, United States thread, is as follows:

$3747 - 3450 = 297$ pounds.

PROPORTION OF PARTS.

55. Braces consisting of two or more parts, such as the body, palm, jaw and eye, should be so designed that the body is the weaker part of all parts. The designing is based on ratio and proportion. For instance: Assuming the diameter of the body of the brace Fig. 21, to be 1 inch, the area would be: $1\frac{1}{8} \times 1\frac{1}{8} \times .7854 = .994$ square inches – and if the brace was allowed 6000 pounds stress per square inch, then the actual load allowed on the brace would be: $.994 \times 6000 = 5964$ pounds.

When designing the palm of the brace it is necessary to consider that its minimum cross-sectional area must at least equal the minimum cross-sectional area of the body, and if the material is not homogenous the minimum cross-sectional area of the palm should exceed the minimum

cross-sectional area of the body. The force acting on the body in the direction is pulling with the grain, while the force acting on the palm is pulling across the grain.

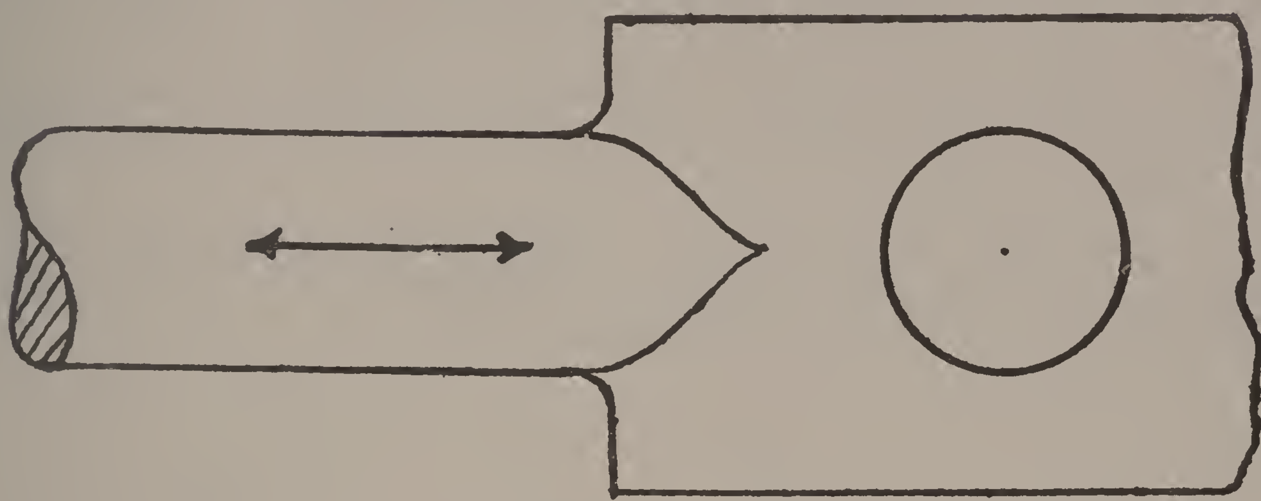

Fig. 21.

56. Material that is homogeneous can withstand the same stress across the grain as with the grain, or nearly so, the difference being so slight that it is not considered. Grain as herein used means the direction in which the plate or bar was rolled. The commercial steam boiler material is made as near homogeneous as practicable, and is spoken of as having no grain. The foregoing expression, however, merely means that the material is able to resist as great a force in one direction as in another direction.

57. The body of the brace being $1\frac{1}{8}$-inches in diameter, as mentioned in Art 55, and having a cross-sectional area of .994 inch, then the least cross-sectional area of the palm when made of homogeneous material must be at least .994 inch – say 1 inch. Assuming the thickness of the palm to be $\frac{1}{2}$ inch, and the rivet hole 1 inch in diameter, the width of the palm must be sufficient so that there will be at least 1 in cross-sectional area. The width of the palm is found as follows:

$$1 \div \tfrac{1}{2} = 2 \text{ inches.} \quad 2 \times 1 = 3 \text{ inches.}$$

Or the calculations may be written as follows:

$$(1 \div \tfrac{1}{2}) + 1 = 3 \text{ inches.}$$

58. If the width be first decided and the thickness of the brace is to be found, then subtract from the width of the palm the diameter of the rivet hole in the palm, after which divide the cross-sectional area required by the above product. Assuming the measurements to be the same as in Art. 57, then the calculations can be written as follows:

$$1 \div (3 - 1) = \tfrac{1}{2} \text{ inch.}$$

59. Iron is not homogeneous and will part more readily across the grain than with the grain. If the brace, Fig. 21, is made of iron the

cross-sectional area of palm must be greater than the cross-sectional area of the body, and because the force acting on the body is pulling with the grain, while with the palm the force is pulling across the grain. To determine just how much more area is required in the palm (the force acting across the grain) than in the body of the brace (the force acting with the grain) requires only the use of ratio and proportion, and the ratio depends upon the grade of iron. No set ratio can be given, though the ratio will be near to 8 to 7.

60. Assuming this ratio to have been established as correct in this instance, then the ½ inch thickness of the palm as given in Art. 58, would not be sufficient; the correct thickness would be:

$$\frac{\frac{1}{2} \times 8}{7} = .57 \text{ inch.}$$

NOTE—In practice ⅝-inch material would be used.

PITCH OF STAY BOLTS.

61. The pitch of stay bolts – that is, the distance from center to center, depends upon the following:

First: Size of stay bolt. Second: Thickness of plate the stay bolt supports. Third: The working pressure per square inch.

The area to be supported by a stay bolt will be large or small according to the pitch. If the stay bolts are 4-inch centers, then one stay bolt supports $4 \times 4 = 16$ square inches. In order that the pitch may be the desired amount, the size of the stay bolt must be such as to be able to carry the load to which it will be subjected, and the plate must be of sufficient thickness that the pressure will not bulge it between the stay bolts.

Assuming the pitch to be decided – say 4-inch pitch, which means one stay bolt supports an area of 16 inches – then the size of stay bolt needed for said pitch must be found. The load carried by the stay bolt depends upon the area it supports and the working pressure. If the stay bolt supports an rea of 16 inches and the working pressure is 150 pounds to the square inch, then the load the staybolt will have to withstand will be $16 \times 150 = 2400$ pounds.

62. From the above it will be seen that the pitch, the area to be supported, and the load of the stay bolt is known, but the diameter of the later is yet to be found. Assuming the allowable working stress of the stay bolt to be 6000 pounds per square inch, then the medium area of the stay bolt would be:

$$\frac{\overset{40}{\cancel{2400}} \times \cancel{100}}{\underset{\cancel{60}}{\cancel{600}}} = .40 \text{ square inch}$$

The diameter may then be found as follows:

$$\sqrt{\frac{40}{.7854}} = .71 \text{ inch}$$

63. These calculations show how to figure out the area required; also, the diameter of the stay bolt at the root of the thread. The outside diameter of the stay bolt depends upon the type of thread selected. Assuming the stay bolt to have United States thread, then add the constant, .10825, to the .71-inch, or $.10825 + .71 = .81825$ inch. However, .81825 inch, when changed to a fraction is a little greater than $\frac{13}{16}$ inch, therefore, in this instance a $\frac{7}{8}$-inch stay bolt, which is about as small as should be used, permits (considering the stay bolts only) a working pressure greater than 150 pounds to the square inch on the boiler. The allowance pressure (stay bolts 4-inch centers) is found by multiplying the area of the $\frac{7}{8}$-inch stay bolt by 6000, and dividing the product by the area supported by the stay bolt, or:

$$\frac{6000 \times .4622}{16} = 173 \text{ pounds}$$

NOTE.—The decimal, .4622, as given in the foregoing is the area of a $\frac{7}{8}$-inch stay bolt, United States thread.

RELATION OF BRACE TO PLATE.

65. The arrangement of stay bolts and braces can not be spaced without regards as to the thickness of the plates which the stay bolts or braces are to support – in fact the whole purpose of staybolts and braces is to support the plate in such a manner the deformation will not take place. While the stay bolt or brace may be of sufficient size to carry the desired load, the allowable pressure on the plate is regulated more or less by the method of attaching the stay bolt or brace to it, and the manner of attaching the stay bolt or brace may be such the pressure allowed will be considered below the pressure desired. This might result in a heavier plate being used; or a change in the method of fastening the stay bolts or braces; or a change in the pitch, which may cause smaller stay bolts or braces to be used.

66. A firebox sheet is of light material to permit rapid generation of steam; the heavier the plate the more difficult to generate steam. The method of fastening stay bolts and braces depends upon their location in regards to the flames and hot gases. The stay bolts, which support the locomotive firebox side sheets, are secured to the sheets by being screwed into the plates; a portion of the bolt projecting beyond the plate, and then riveted over.

67. The allowable working pressure for the plate depends upon its thickness; the pitch of the stay bolts; and the method of fastening the

stay bolts or braces. The latter is regulated by a constant, and varies acording to circumstances. The United States Steamboat Inspection Service authorizes with screwed stays, riveted over, the constant **112** for plates $\frac{7}{16}$-inch and lighter, and the constant 120 for plates heavier than $\frac{7}{16}$-inch.

The allowable working pressure for the plate can be determined by the following formula:

$$\frac{A \times D}{C} = B$$

Where:

A = Constant.
B = Pressure in pounds per square inch.
C = Maximum pitch of stay bolts in inches.
D = Thickness of plate in sixteenths of an inch.

68. Assuming the thickness of the side sheets to be $\frac{5}{16}$-inch (which is about as thin as used with a high pressure boiler), the pressure allowed on the plate, stay bolts 4-inch centers, is found by subtracting values, or: $7 \times 25 = 175$ pounds working pressure.

$$\frac{\overset{7}{\cancel{112}} \times 25}{\cancel{16}} = 175 \text{ pounds working pressure}$$

69. Comparison of the foregoing with the product obtained in Art. 64, shows that the allowable working pressure on the plate and the allowable working pressure on the stay bolt is about the same, per following conditions: Constant 112; $\frac{7}{8}$-inch stay bolt, United States thread; $\frac{5}{16}$-inch steel plate, and stay bolts 4-inch centers.

70. When the pressure and the thickness of the plate are known (which are usually the two things first determined), then the pitch of the stay bolts can be found by the following formula; the letters in the formula represent the same values as given in Art. 67:

$$\sqrt{\frac{A \times D}{B}} = C$$

Substituting values:

$$\sqrt{\frac{\overset{16}{\cancel{112}} \times \cancel{25}}{\underset{\cancel{7}}{\cancel{175}}}} = 4 \text{ inch centers}$$

71. It is not always practicable to make the pitch of the staybolts uniform – that is to say, the horizontal distance between the staybolts can not always be made the same as the vertical distance between the staybolts. However, the respective distances should be as near uniform as practicable, and the area the staybolt is to support is figured by some as the square of the maximum pitch. Thus, if the pitch of the staybolts is $4 \times 3\frac{7}{8}$ inches, the area is computed as $4 \times 4 = 16$ square inches.

72. Many locomotive boilers are designed so that the outer row of staybolts are of greater diameter than the staybolts of the inner rows. The principal reason of the foregoing is that the shape of the boiler is such that the staybolts at certain places must be placed exceptionally far apart. For instance: The pitch of staybolts in the illustration, Fig. 22, may be uniform throughout except the distance *a* between the line of rivet holes of the mud ring and the first row of staybolts above the mud ring.

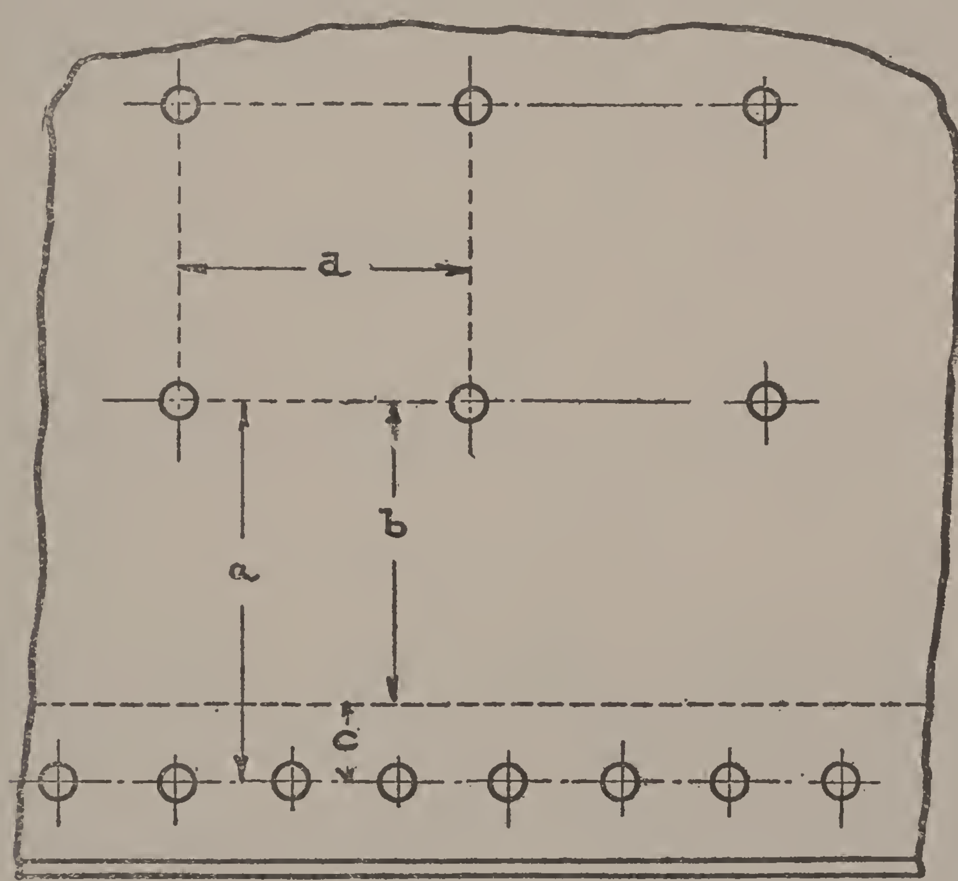

Fig. 22.

73. The distance *a* is equal to the distance *b*, plus the distance *c*. Assuming the pitches *b* and *d* to be 4 inches, and the pitch *a* to be 5 inches, then the actual area to be supported by the stayblot next to the mud-ring would be $4 \times 5 = 20$ square inches. However, some authorities figure the area as $5 \times 5 = 25$ square inches, while others figure the area as follows:

$$\frac{4^2 \times 5^2}{2} = \frac{41}{2} = 20\tfrac{1}{2} \text{ square inches.}$$

The foregoing merely gives the different areas computed by different methods. As there is no general understanding among mechanical men as to which method should be used in practice, one designer uses one method and another designer another method, and though the boilers designed by the respective parties may be alike in construction, the working pressure allowed would be greater in one case than in the other.

74. In Arts. 64 and 68 it was shown that if the staybolts were 4-inch centers, plates $\frac{5}{16}$-inch thick, the allowable working pressure for the staybolts would be 173 pounds per square inch, and for the plate 175 pounds per square inch. However, if the boiler was of the locomotive type, requiring the staybolts to be arranged as shown in Fig. 22, making the pitch a 5 inches, while the pitches b and d were each 4 inches, the allowable working pressure, $\frac{5}{16}$-inch plate, would be a considerable less than stated in Arts. 64 and 68.

75. Just how much less the pressure would be depends upon how the area is computed. If the maximum pitch times the minimum pitch method is employed, or $4 \times 5 = 20$ square inches, then the allowable working pressure for the plate will be:

$$\frac{\overset{28}{\cancel{112}} \times \overset{5}{\cancel{25}}}{\underset{4}{\cancel{20}}} = 140 \text{ pounds}$$

76. If the method of squaring the maximum pitch is used, or $5 \times 5 = 25$ square inches, then the allowable working pressure will be:

$$\frac{112 \times \cancel{25}}{\cancel{25}} = 112 \text{ pounds}$$

77. In Art. 64 the allowable pressure for a $\frac{3}{4}$-inch staybolt, 4-inch pitch, $\frac{5}{16}$-inch plate, was found to be 173 pounds. Since the pitch a, Fig. 22, is 5 inches, the area the staybolt must support is increased. Assuming the area to be 20 square inches, as given in Art. 75, then the allowable working pressure for a $\frac{3}{4}$-inch staybolt will be:

$$\frac{\overset{300}{\cancel{6000}} \times .4622}{\cancel{20}} = 138.66 \text{ pounds}$$

78. Assuming the area to be 25 square inches as given in Art. 76, the allowable working pressure for a $\frac{3}{4}$-inch staybolt will be:

$$\frac{\overset{240}{\cancel{6000}} \times .4622}{\cancel{25}} = 110 \text{ pounds}$$

79. The foregoing well illustrates the need of the mechanical men getting together and adopting a standard. The constant, 112, as given in Art. 64 and 69, is not an accepted standard. The calculations, however, show that the plate in each instance is allowed the greatest working pressure.

80. Assuming the area to be supported by the staybolt to be 20 square inches, $\frac{7}{8}$-inch staybolt, $\frac{5}{16}$-inch plate, which (see Art. 75) permits, for the plate an allowable working pressure of 140 pounds to the square inch, and if this is the working pressure desired, then the staybolts in the row adjacent to the mud ring would have to be greater than $\frac{7}{8}$-inch diameter, for, according to Art. 77, the allowable working pressure is 138 pounds to the square inch. A larger staybolt—say $\frac{15}{16}$-inch in diameter – would suffice in this case, and would permit an allowable working pressure of over 140 pounds to the square inch. While the boiler may be constructed so that many parts could be allowed a greater working pressure per square inch than another part, the working pressure allowed must be computed from the weakest point – no chain is stronger than its weakest link.

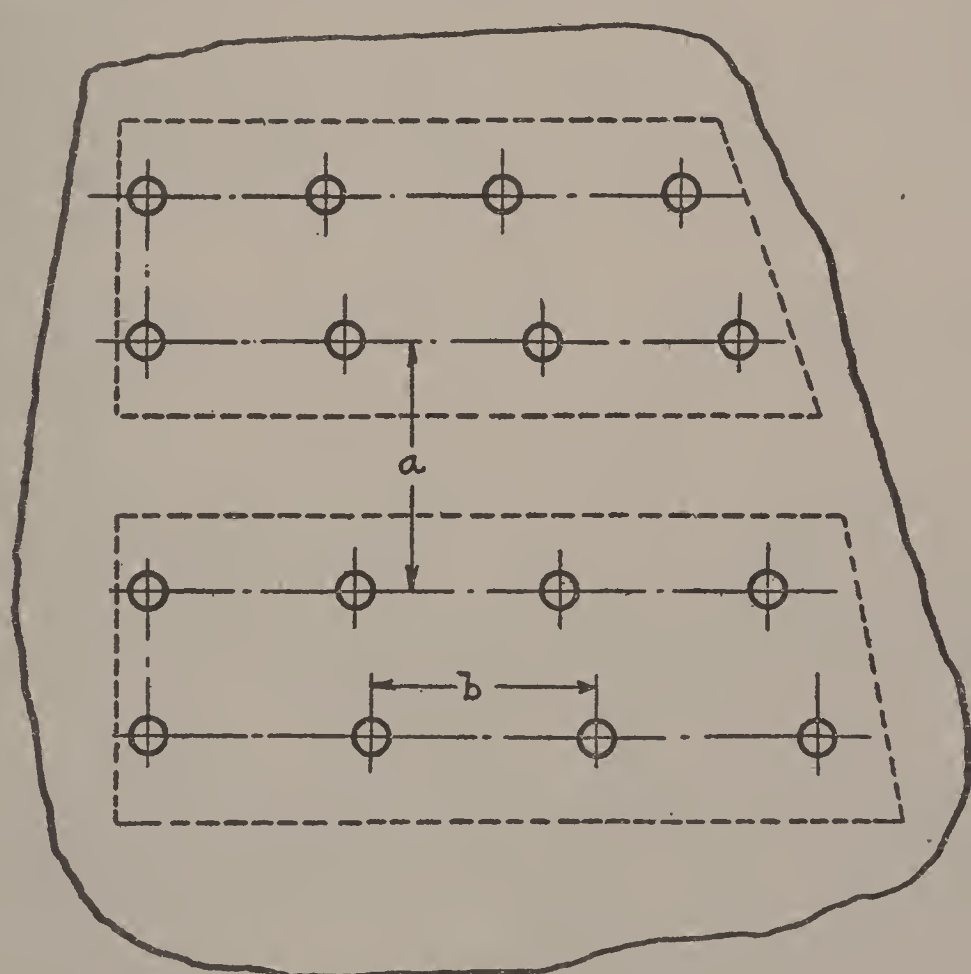

Fig. 23.

AREA SUPPORTED BY A RIVET.

81. When boilers are constructed with T-irons, or angle irons, riveted to the back head, front flue sheet, etc., for the purpose of sup-

porting the sheet, and providing means for attaching the braces, the size and pitch of the rivets used for attaching the T-iron, angle irons, etc., to the plates have a bearing on the allowable working pressure. The back head and the front flue sheet are usually of very heavy material, and generally the only consideration is the size and pitch of the rivets which attach the T-irons, or angle irons to the plates. The pitch of the rivets is usually irregular – that is to say, vary, which is well illustrated in Fig. 23.

82. It is the practice with most of the designers to figure that the rivet is to support an area equal to the square of the maximum pitch. Thus, if the pitch *a*, Fig. 23, is 5 inches, and the pitch *b*, 4 inches, the area is assumed to be:

$$5 \times 5 = 25 \text{ square inches.}$$

The area is then multiplied by the working pressure – and assuming this to be 140 pounds – the same as found in Art. 75 – then the assumed load carried by the rivet would be:

$$25 \times 140 = 3{,}500 \text{ pounds.}$$

83. The rivets, in this instance, would be subject to practically a direct pull – would be in tension. Allowing a working stress of 6,000 pounds per square inch, which is the same as allowed for a direct pull on the threaded staybolt, the area of the rivet required would be:

$$3500 \div 6000 = .5833 \text{ square inch.}$$

The area would be:

$$\sqrt{\frac{.5833}{.7854}} = .87 \text{ – say } \tfrac{7}{8}\text{-inch.}$$

84. The actual load allowed on a $\frac{7}{8}$-inch rivet figuring on 6000 pounds allowable stress per square inch, would be:

$$.6013 \times 6000 = 3607 \text{ pounds.}$$

As the load on a $\frac{7}{8}$-inch rivet, 5-inch pitch, 140 pounds working pressure, was found in Art. 82 to be 3500 pounds, and as the rivet (See Art. 84) is allowed a stress of 3607 pounds, the $\frac{7}{8}$-inch rivet in this instance is sufficient for the purpose.

DISTRIBUTION OF BRACES.

85. Many backheads and front flue sheets of locomotive boilers, and the two heads of tubular boilers, etc., are stayed by direct and indirect stays attached to the head as shown in Fig 24. When arrang-

ing the stays, staying an irregular surface, it is practically impossible to so distribute the stays that each one will carry the same load.

A portion of the head of a tubular boiler is shown in Fig. 24, and the letters a and b represent the pitch of the braces in the respective rows. The pitch a, which is the distance from center to center of the braces of the outer row, is greater than the pitch b, and for the reason that the radii in the former is greater than the latter. It may be possible in some cases to put less braces in the inner row than in the outer row, but the pitch of the braces of the respective rows will not be the same.

Under these conditions the area supported by the brace must be computed from the maximum pitch, which in Fig. 24 is the distance a. Braces constructed with a crowfoot are usually attached to the plates with two rivets. The pitch between the two rivets is usually uniform regardless of the pitch of the braces. Thus, the distance c, Fig. 24, varies with the pitch of the braces, and the distance d, which is the pitch of the rivets in the crowfoot of the braces, is the same in all the braces, both outer and inner rows.

The area supported by the brace is:

Where:

a = maximum pitch of braces in inches.
e = distance between rows or braces in inches.

$$a \times e = \text{area}.$$

Assuming the pitch a to be 9 inches and the distance e to be 6 inches, then the actual area supported by the brace would be:

$$6 \times 9 = 54 \text{ square inches.}$$

86. As stated in Art. 73 authorities differ as to the manner of figuring the area, and some, perhaps, would square the maximum pitch, or $9 \times 9 = 81$ square inches. However, when a boiler head is braced as shown in Fig. 24, the area supported by the brace should be figured as the maximum pitch times the minimum pitch. The load carried by the inner row of braces will not be as great as the load carried by the outer row of braces—and while some designers under such conditions would use a smaller size brace for the inner row than the outer row, the general practice is to use the same size brace in both the inner and outer rows.

87. The area supported by the rivets, Fig. 24, must be figured as $c \times e$ instead of $d \times e$. In Art. 85 it was assumed that the distance a was 9 inches and the distance e was 6 inches, making an area of 54 square inches to be supported by the brace. Since each brace has two rivets the first conclusion would be that each rivet carried one-half of the load, and, therefore, supports 27 square inches.

However, referring to Art. 82 it will be seen that the practice with most designers is to figure the area supported by the rivet as equal to the square of the maximum pitch, and this in this case would be:

$$6 \times 6 = 36 \text{ square inches.}$$

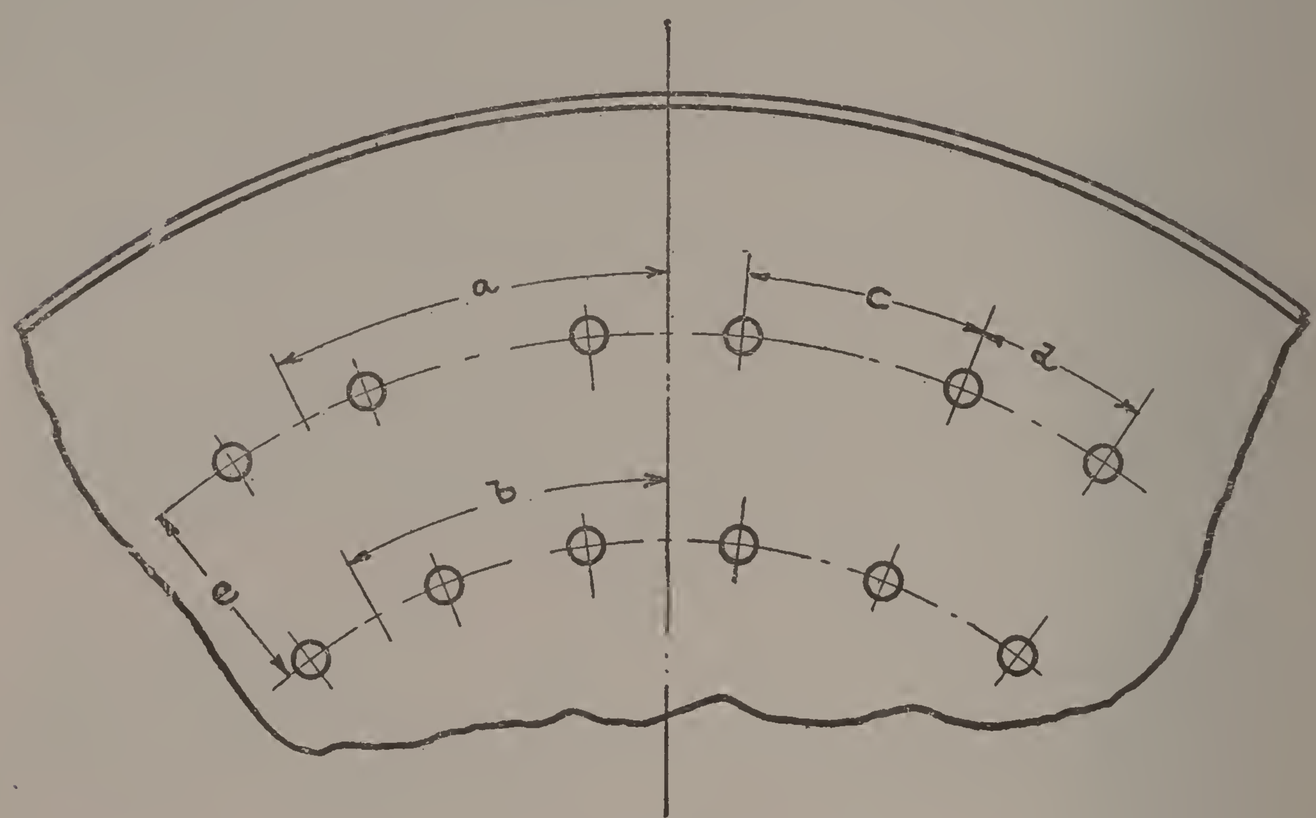

Fig. 24.

Some designers, however, when the braces are arranged as shown in Fig. 24, make an exception to the general rule, and figure the area by multiplying the maximum pitch by the minimum pitch. Then assuming the distance *d*, Fig. 24, to be 4 inches, which makes the distance *c*, 5 inches, the area supported by the rivet would be:

$$5 \times 6 = 30 \text{ square inches.}$$

SUPPORTING THE SHEETS.

88. As stated in Art. 67 the constant used in connection with the method of fastening the braces varied according to circumstances and authorities. Frequently a few large braces instead of a number of small braces are used, but in such cases the plate is reinforced by another plate. For instance: The backhead of a locomotive type boiler may be $\frac{3}{8}$-inch, $\frac{7}{8}$-inch staybolts at 4-inch centers, and the longitudinal braces which support the upper part of the head may be spaced 6 by 9 inches. Therefore, the plate between the staybolts, using the constant 112 as given in Art. 67, would permit a working pressure as follows:

$$\frac{\overset{7}{\cancel{112}} \times 36}{\cancel{16}} = 252 \text{ pounds.}$$

The area to be supported by a $\frac{7}{8}$-inch staybolt would be 16 square inches, and the allowable working pressure as far as the plate is concerned is 252 pounds. In Art. 68 it was shown that with the same size and pitch of staybolts as given in the above example, the allowable working pressure for the plate would be 173 pounds, and in Art. 64 it was shown that a $\frac{7}{8}$-inch staybolt, 4-inch centers, regardless of 173 the thickness of the plate, would be allowed a working pressure of 173 pounds.

89. To space the longitudinal braces, 6 by 9 inches, without reinforcing the head at that portion would reduce the allowable working pressure, or as follows:

$$\frac{112 \times \overset{2}{\cancel{36}}}{\underset{3}{\cancel{54}}} = 74 \text{ pounds.}$$

The foregoing calculations show that the head where the longitudinal braces are attached must be heavier than where the staybolts are attached. This is accomplished by a reinforcing plate. Assuming a $\frac{3}{8}$-inch reinforcing plate to be added to the $\frac{3}{8}$-inch head, then the thickness of both would be $\frac{3}{4}$-inch. However, when a reinforcing plate is added to the head in the manner described, most designers when figuring out the allowable working pressure assume the thickness to be about 75 per cent of the actual thickness. Two plates secured together by riveting are not able to resists the same as one plate of the same thickness as the two plates. Under these conditions two $\frac{3}{8}$-inch plates would be considered in the calculations as the same as a $\frac{9}{16}$-inch plate. Then the allowable working pressure would be:

$$\frac{\overset{20}{\cancel{120}} \times \overset{9}{\cancel{81}}}{\underset{6}{\cancel{54}}} = 180 \text{ pounds.}$$

NOTE—Since the plate is over $\frac{7}{16}$-inch in thickness the constant 120 (See Art. 67) is used.

90. A study of the underlying principles of boiler designing will show the object of reinforcing certain parts of a boiler. In the foregoing case the addition of the $\frac{3}{8}$-inch reinforcing plate increased the allowable working pressure (See Art. 89) from 74 pounds to 180 pounds, and caused to be used a constant with greater numerals. The furnace sheet is generally considerably lighter than the outside sheets. If

the outside sheet is very heavy – say $\frac{5}{8}$-inch – and the furnace sheet light – say $\frac{5}{16}$-inch – the allowable working pressure as far as the outside plate is concerned will be many pounds greater than the furnace sheet. The allowable working pressure of the boiler, however, is the lowest working pressure allowed for any part. Each part must be computed in order to ascertain just what part is the weakest of all the parts. The construction of the boiler may be such that one part is twice or three times as strong as another part. The factor of safety for all parts is not alike, nor is the constant, etc. All the foregoing must be considered when designing a boiler.

BRACING CURVED SURFACES

STAYING A FURNACE.

91. The sheet *a*, Fig. 25, must be stayed the same as a flat sheet. Though the sheet is curved, the pressure tends to crush in or collapse it; the force in this instance acting the opposite to its action on the boiler shell. In Fig. 2, the forces tending to rupture the shell by internal pressure are shown by arrows, but the force acting on the crown sheet *a*, Fig. 25, is an external force; hence, the radial stays *b*, *c*, *d*, and *e*, are for the sole purpose of supporting the crown sheet *a*, and not the roof sheet *a′*. The side staybolts below the line *A A* are for the purpose of staying both the furnace side sheet *f* and the outside wrapper sheet *g*.

As the crown sheet of most of the locomotive boilers is higher at the front (firebox flue sheet end) than at the back (door sheet end) the radial and crown bolts supporting the crown sheet should be at right angles to it irrespective of how they strike the roof sheet. If the roof sheet is not heavy and the stays strike it at such an angle that a sufficient number of continuous threads, equal to the amount in the crown sheet, cannot be secured, then a reinforcing line *h*, should be placed inside the roof sheet as shown in Fig. 25.

92. Inspection of Fig. 25, reveals that the stays radiate from the same points as used as centers with the respective arcs for developing the furnace. Thus: the stays *b*, *c*, and *d*, radiate from the point *i*; the stay *e*, from the point *j*; and some of the other stays radiate from the points *k*, and *l*. The distance between the rows of stays of the furnace sheet *f*, is uniform, but not so with the outside sheet *g*; also, the distance between the rows of stays of the roof sheet will vary considerable.

ALLOWABLE LOAD ON AN INDIRECT BRACE.

93. Every brace should be as direct as possible – that is to say, should be as near at a right angle as possible to the surface it supports.

It is impossible, however, to locate all braces at right angles to the surfaces they support; hence, the indirect brace, though no indirect brace should be placed over 20° to the surface it supports.

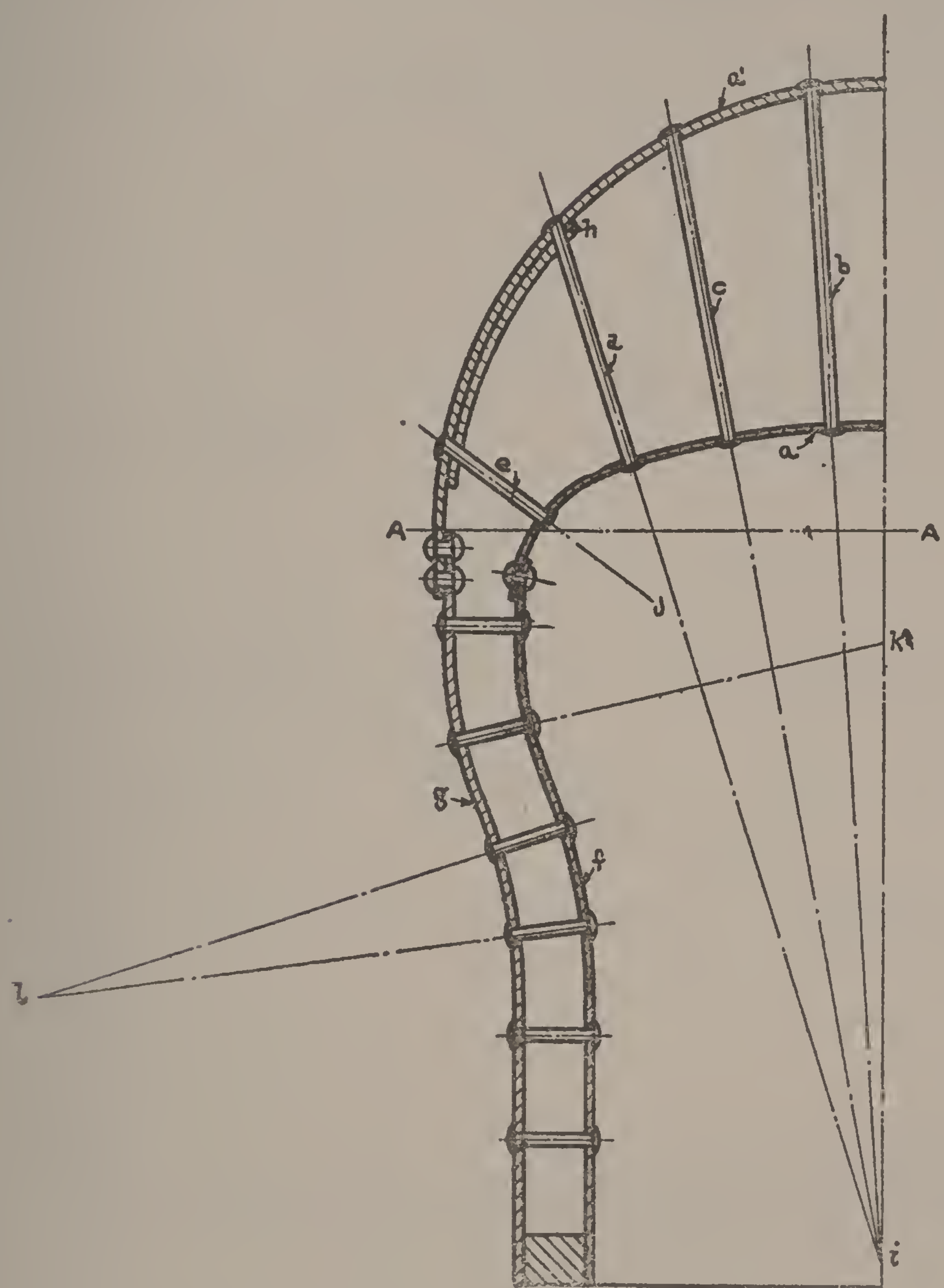

Fig. 25.

Like many other parts of a boiler, the allowable load on an indirect brace is figured differently by authorities. An indirect brace and a direct brace of the same size and construction are allowed different working stresses – the direct brace is allowed a greater stress than the indirect brace.

94. For instance: The body of the brace *a*, Fig. 26, is 1⅛ inch in diameter, which makes an area of .994 square inches. The brace is inclined at the maximum – 20° – and to determine the allowable working stress, figuring 6,000 stress per square inch, direct pull, the following formula, which is one of the many, is used.

Where:

a = Length of brace in inches in horizontal plane.
b = Length of brace in inches on the incline.
c = Allowable working stress per square inch, direct pull, in pounds.
d = Allowable working stress per square inch, direct pull, in pounds.
c = Area of brace in square inches.

$$\frac{a \times c \times e}{b} = d$$

95. Assuming the distance a, Fig. 26, to be 47 inches, and the distance b, to be 48 inches, then substituting values the allowable working

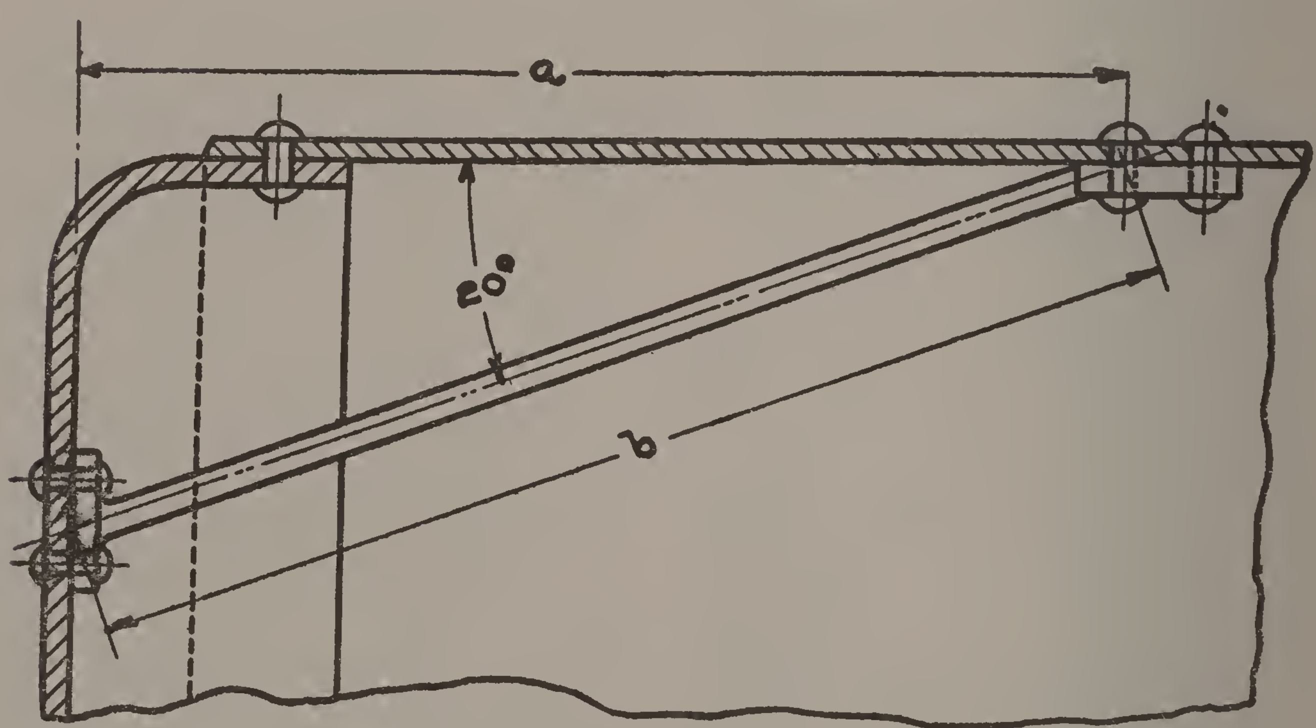

Fig. 26.

stress for the brace, 1⅛ inch in diameter, allowable working stress of 6000 pounds per square inch, direct pull, is:

$$\frac{47 \times \overset{125}{\cancel{6000}} \times .994}{\cancel{48}} = 5839.75 \text{ pounds}$$

COLLAPSING PRESSURE OF TUBES.

96. The tubes of all boilers except water-tube boilers, are subjected to external pressure. The pressure is as great at one point as at another point, and accordingly it would appear reasonable to presume that the pressure on one side would offset the pressure on the other side. How-

ever, the walls of the tube are not strictly uniform, nor is a tube a true cylinder.

The internal pressure tends at all times to round out the vessel to a true cylinder, while the external pressure is just the reverse. As soon as the tube assumes any shape other than that of a perfectly true cylinder, it is easy prey to the pressure and the latter causes the collapsing of the tube. For this reason it is essential that tubes and furnaces that are subjected to external pressure be made as perfectly true in diameter as possible. The formation of scale on a cylinder subjected to external pressure, will cause a greater pressure at one point than at another point, and this coupled together with the fact that the working of the boiler causes shocks, leads up to the collapsing of many flues; also, round furnaces such as used in marine and other types of boilers.

97. Professor Reid T. Stewart, of Allegheny, Pennsylvania, conducted experiments to ascertain the collapsing pressure of flues. Prior to his experiments it was the general practice throughout the country to take into consideration the length of the tube or furnace from end to end, ring to ring, or joint to joint. The experiments showed that this was a false theory with regards to flues, for a long flue may collapse at one point and the balance of the flue be perfectly true. The support from the rigid end was so insignificant that it was not worthy of being taken into consideration.

Professor Stewart, after making many tests advanced formulas A and B.

Formula A:

$$P = 1000\left(1 - \sqrt{1 - 1600 \frac{(T)^2}{(D)^2}}\right)$$

Formula B:

$$P = 86{,}670 \frac{T}{D} = 1{,}386.$$

Where:

P = Collapsing pressure in pounds per square inch.
D = Outside diameter of tube in inches.
T = Thickness of wall in inches.

Note.—Formula A is for values less than 581 pounds, or for values of T÷D less than .023. Formula B is for values greater than these.

TABLE II.

The United States Steam-boat Inspection Service allows 225 pounds pressure per square inch on all lap-welded flues up to 6 inches in diameter, if the material conforms to Table II.

Outside Diameter	Thickness	Outside Diameter	Thickness
1 inch	.072 inch	3 inch	.109 inch
1¼ inch	.072 inch	3¼ inch	.120 inch
1½ inch	.083 inch	3½ inch	.120 inch
1¾ inch	.095 inch	3¾ inch	.120 inch
2 inch	.095 inch	4 inch	.134 inch
2¼ inch	.095 inch	4½ inch	.134 inch
2½ inch	.109 inch	5 inch	.148 inch
2¾ inch	.109 inch	6 inch	.165 inch

98. Marine boilers are generally constructed with a round furnace, which is subjected to an external pressure. Unlike small flues the length of the furnace must be considered when computing the allowable working pressure. The greater the diameter of the furnace, the heavier must be its walls, though to generate steam the thickness of the walls must

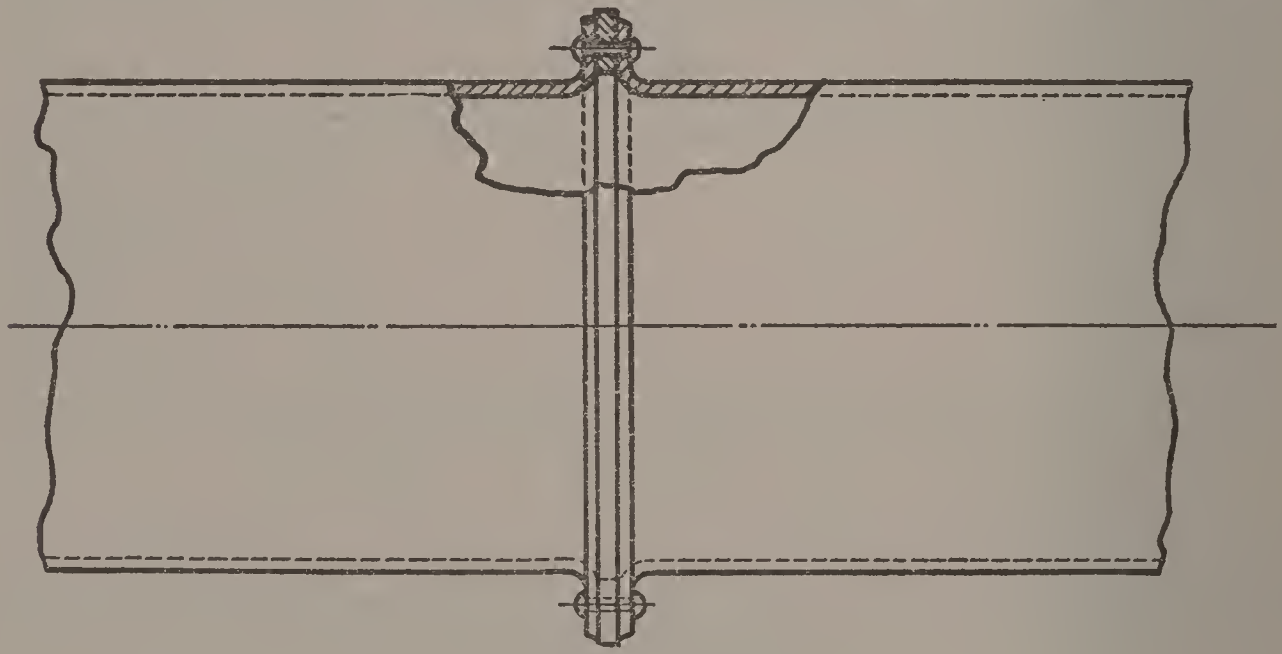

Fig. 27.

be kept within the limits. For this reason furnaces are made corrugated, the corrugations act as a rib or a supporter to the furnace, thereby permitting the use of a furnace of a large diameter and thin walls than would be permissable if the furnace was a plain round cylinder. Furnaces are, however, constructed as a plain cylinder, but are re-inforced by ribs, etc., or the furnace is constructed in sections, called RINGS, as shown in Fig. 27.

The length of the furnace is taken into consideration as the furnace receives more or less support from the rigid ends. While the support

from the rigid ends is not distributed uniformly over the furnace, it aids the entire furnace between the rigid ends, the center the least, unless the distance between the rigid ends is exceptionally great, and in such cases the center receives the support. The allowable over-all distance of the furnace between rigid ends depends upon the diameter of the furnace, the thickness of the walls, the style of furnace, etc.

99. A formula advocated when the furnace is constructed as shown in Fig. 27, sections not less than 18 inches in length and walls not less than $\frac{5}{16}$-inch thick, and flanged to a depth of not less than three times the diameter of the rivet hole plus the radius at furnace wall (inside diameter of the furnace), the thickness of the flanges to be as near the thickness of the body of the plate as practicable, is as follows:

$$P = \frac{51.5}{D} [18.75 \times 8 - (48 \times 103)] =$$

Where:

P = Working pressure in pounds per square inch.
D = Outside diameter of the furnace in inches.
L = Length of the furnace in inches.
T = Thickness of the plate in sixteenths of an inch.

Example:

Assuming a furnace to be 44 inches in diameter, 48 inches in length, and the walls ½ inch thick, then substituting values in the formula, the allowable working pressure will be:

$$P = \frac{51.5}{44} [18.75 \times T - (L \times 1.03)]$$

$$1.17 \quad [150 - 49.4] = 117.7 \text{ pounds.}$$

In calculating the allowable working pressure of a corrugated furnace the first thing to do is to look up the rules and regulations of the authorities under whose supervision the boiler is operated. The following formula for corrugated furnace is advanced by the Board of Supervising Inspectors, United States Steam-boat Inspection Service:

$$P = \frac{C \times T}{D}$$

Where:

P = Pressure per square inch pounds.
T = Thickness in inches (wall not to be less than $\frac{5}{16}$-inch).
D = Mean diameter in inches.
C = Constant.

NOTE.—The mean diameter means mid-way between the inside and outside diameters. Some authorities make D in the formula to represent

the outside diameter, while others make D to represent the inside diameter. The constant under such conditions naturally varies, and since there are several forms of corrugated furnaces, the type of furnace, together with the rules and regulations of the authorities under whose supervision the boiler will be operated, must always be considered.

RE-INFORCING RINGS.

100. Tubular, marine and many other types of boilers are constructed with a manhole for the purpose of permitting entrance to the boiler. A manhole should never be round, and for the reason that the manhole cover cannot enter the boiler and be placed in place. A manhole is usually made about 15 inches by 11 inches, which is large enough to permit a man to enter the boiler. As the stress on the longitudinal plane is twice as great as the stress on the transverse plane, the manhole should be placed so that the minor diameter of the manhole is in the longitudinal plane.

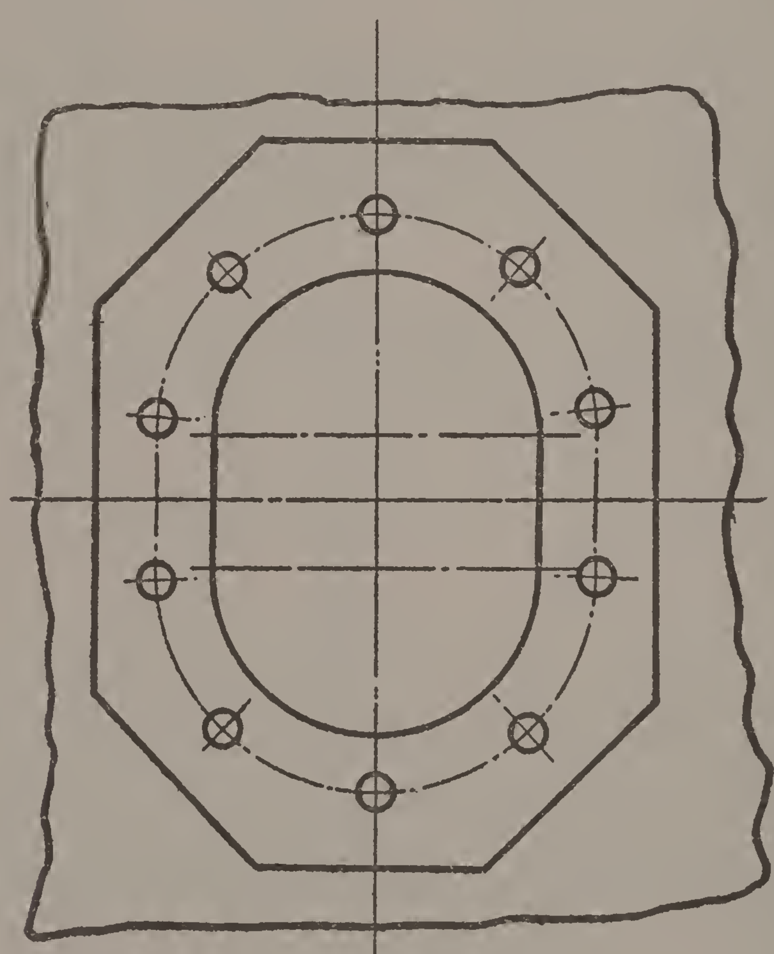

Fig. 28.

To compensate the boiler shell for the strength lost by cutting the hole, a re-inforcing liner in placed around the hole as shown in Fig. 28. Assuming that the manhole is 11 inches by 15 inches, minor diameter placed in the longitudinal seam, or lengthwise of the boiler, the section of metal to replace would be 11 inches times the thickness. Assuming the shell to be $\frac{7}{16}$-inch, then the area removed will be $11 \times .4375 = 4.8125$ square inches. The re-inforcing liner may be of any thickness, but not

less than the shell, and in this instance assuming the liner to be $\frac{9}{16}$-inch thick, its width will then be:

$$\frac{4.8125}{.562} = 8.59 \text{ inches}$$

One-half of this will be on each side of the manhole, or 8.59÷2 = 8.30 inches. This, however, is the net section of plate, and as the liner must be riveted in place, the width of the liner must be increased by an amount equal to the diameter of the rivet used. Should 1 inch rivets be used, then the width of the liner on each side of the manhole would be: 4.30÷1 = 5.30 inches.

The liner, however, must be of the same material as the boiler shell, or at least have the same strength. Cast iron re-inforcing rings have gradually fallen into disuse, and because of the lack of homogeneity in cast iron; also, the low tensile strength, and blow holes which are frequently found in iron castings.

In computing the number of rivets to be placed in the re-inforcing liner, the usual practice is to make their total shearing strength not less than the total tensile strength of the re-inforcing liner. Previous calculations gave for the cross-sectional area, longtitudinal plane, 4.8125 square inches, and assuming the tensile strength of the plate to be 60,000 pounds per square inch, the total will be: 4.8125 × 60,000 = 288,750 pounds.

With 1 inch rivet holes (area .7854), and assuming the shearing strength of the rivet to be 42,000 pounds per square inch, then one 1 inch rivet would have a shearing strength of 42,000 × .7854 = 32,986.8 pounds. The total rivets required would be:

$$\frac{288,750}{32,986.6} = 8\dagger \text{ rivets}$$

Note: In this instance the calculations show that 8 rivets, 1 inch diameter, are nearly sufficient. If 9 rivets, 1 inch in diameter, wer used, then the shearing strength of the rivets would exceed that of the net section of plate removed by considerable, but notwithstanding this, the number of rivets to be used in this instance would be 10, thus permitting 5 rivets to be placed on each side of the manhole as shown in Fig. 28. Since 10 rivets are to be used and their shearing strength exceeds that of the net section of plate by many pounds, it will be seen that a rivet smaller than 1 inch can be used. The area of a $\frac{15}{16}$-inch rivet is .59 square inch, and using the same shearing strength as with the 1 inch rivet, the shearing strength of a $\frac{7}{16}$-inch rivet is: 42,000 × .69 – 28,980 pounds. Then, 288,750÷28,980 = 10 rivets, thus, in this instance, 10 rivets, $\frac{15}{16}$-inch in diameter will suffice.

BOILER CAPACITY.

HEAT AND STEAM.

THE THEORY OF STEAM MAKING.

101. All scientists agree that heat is a form of energy. It is well known that in order to change ice to water heat is required. By adding sufficient heat the water can be changed into steam. All matter is composed of molecules which are in a state of unrest, moving or vibrating back and forth with more or less velocity. If the motion is slow, the body feels cold; if the motion is rapid, the body feels warm, and it is this movement of the molecules that is regarded to cause the foregoing.

Steam is merely water changed into a gaseous state by the application of heat. To generate steam it is first necessary to produce the heat and second to transfer the heat to the water. Water in an open vessel can be heated to 212° F., and no hotter. When it reaches that temperature the water boils and is converted in water vapor or steam.

Heat cannot be measured directly in pounds, and, because it is not a substance, but it can be measured by the effects it produces. To raise the temperature of one pound of water one degree requires heat. The UNIT QUANTITY OF HEAT required to raise the temperature of a pound of water one degree is called a BRITISH THERMAL UNIT; generally abbreviated to B. T. U.

While for ordinary purposes it is assumed that it takes one B. T. U. to produce a change of one degree in the temperature of one pound of water, it actually does, however, require slightly more than one B. T. U. to change the temperature above 63°—the difference increasing the farther the temperature is from 63°. Below the temperature of 62° it requires slightly less than one B. T. U. to produce a change of one degree in the temperature. From this it will be seen that it requires more heat to raise the temperature of one pound of water from 80° to 90° than it would to raise it from 88° to 89°; also, it will take less heat to raise the temperature of one pound of water from 41° to 42°. For all temperatures likely to be met in practice it is proper to assume that it requires one B. T. U. to raise the temperature of one pound of water one degree.

When a given quantity of water at a given temperature has been changed into steam at a given pressure, a certain definite work has been done, and a certain amount of energy expended. As heat can be changed into work and work into heat, there must be a mechanical equivalent to one B. T. U. This was found to be 778 foot-pounds.

Mix hot water with cold water and the result will be that the temperature of the cold water increases while the temperature of the hot water decreases. The exact temperature will depend upon the respective

quantities and temperatures of the hot and cold water. In an open vessel the temperature cannot be made greater than 212°, and for the reason that the steam can escape. In a closed vessel, the steam cannot escape, therefore, the temperature of the steam will increase according to the amount of heat applied.

Water in an open vessel is exposed to the atmosphere pressure of 14.7 pounds per square inch (sea level – in practice generally assumed to be 15 pounds to the square inch) and boils at 212°. In a closed vessel the boiling point depends upon the steam pressure per square inch. As the pressure increases the boiling point raises accordingly. Water, steam pressure six pounds per square inch, will boil at 170°, while water, steam pressure 32 pounds per square inch, will boil at 254°.

Steam is spoken of as dry, wet, saturated and super-heated. If the steam is in contact with water, which is the condition of the steam in a boiler, then the steam is SATURATED STEAM. When a boiler is steaming rapidly, the ebullition is liable to cause water in the form of a spray to mingle with the steam, and steam used with the water mingled is known as WET STEAM. When the steam is separated from the water, it may like air and other gases be heated higher than the boiling point corresponding to its pressure, and the steam is then known as SUPER-HEATED STEAM.

It is not possible to cool saturated steam except by lowering its temperature, nor can steam in contact with water be heated above a temperature normal to its pressure. Priming or wet steam is due to impure water, or two much water, or to improper proportions in the boiler. Steam which contains no water and is transparent, is DRY STEAM.

HEATING SURFACE.

102. The heating surface of a boiler is that part in contact with the flames and hot gases. With a locomotive type boiler, the heating surface includes the furnace, the flues, and the front flue sheet, though some do not consider the latter; with a tubular boiler, the heating surface includes that portion of the boiler shell and the two flue sheets exposed to the flames and hot gases; also, the flues.

When figuring the heating surface of the flue sheet, be sure to deduct the area of the flue holes. The heating surface of a tubular boiler is generally calculated on the basis that two-thirds of the boiler shell is exposed to the flames and hot gases. The amount of the boiler shell so exposed will depend upon the location of the brackets, or if hangers are used, which are used extensively at present, upon the location of the hangers and the arrangement of the brick work below them.

The heating surface of a flue is ascertained by multiplying its inside diameter by the constant 3.1416, times its length in inches. Thus the

heating surface of a 3-inch flue, $\frac{1}{8}$-inch thick, and 14 feet long would be: $3 - (2 \times \frac{1}{8}) = 2\frac{3}{4}$-inch.

$$2\tfrac{3}{4} \times 3.1416 \times 168 = 1451.52 \text{ square inches.}$$

In connection with the heating surface must be considered the grate area. The rate of consumption of fuel per square foot of grate surface depends upon the draft. With one type of boiler the rate of fuel consumption will be 15 pounds of coal per square foot of grate surface per hour, while with the locomotive boiler, where the proportion of grate surface to the heating surface is abnormally low, the rate of fuel consumption has been as high as 150 pounds of coal per square foot of grate area. The ordinary ratio of heatnig surface to grate area in different types of boilers is as follows:

Locomotive	50 and 100 to 1
Water tube	35 and 40 to 1
Tubular	25 and 35 to 1
Vertical	25 and 30 to 1
Flue type	20 and 25 to 1

HORSEPOWER OF BOILERS.

103. Literally speaking, there is no such thing as horespower to a steam boiler; it is a measure applicable only to dynamic effect. The term, however, has come into general use, and is applied to a boiler as boilers are necessary in order to drive steam engines, etc. Considering that the ordinary throttling and slide-valve engine uses 35 to 45 pounds of steam per horsepower per hour; the simple Corliss engine uses 24 to 30 pounds of steam per horsepower per hour; the Corliss condensing uses 19 to 22 pounds of steam per horsepower per hour; and the compound Corliss condensing 14 to 17 pounds of steam per horsepower per hour, it will be seen that the so-called standard boiler horsepower, which consists of the evaporation of 30 pounds of water per hour from a feed-water temperature of 100 degrees F. into steam at 70 pounds gauge pressure, may be a high or a low value per unit of work, depending upon the type of engine to which it is applied.

Standard boiler horsepower rules based on evaporation and absorption cannot always be conveniently used. At 125 steam pressure per

Note.—The judges in charge of the boiler trials at the Centennial Exposition ascertained that a good engine of the then prevailing types required about 30 pounds of steam per hour per horsepower developed. They recommended that an expansion of 30 pounds of water per hour from an initial feed-water temperature of 100 degrees F. to steam at 70 pounds gauge pressure be considered as one boiler horsepower.

To permit comparison of results of the boiler trials, the usual practice is to reduce them all to a basis of equivalent evaporation from and at 212 degrees. Then one boiler horsepower as above defined is equivalent to an evaporation from and at 212 degrees of practically 34.5 pounds.

square inch, the evaporation would be at a temperature of 344 degrees F. If the pressure were 200 pounds per square inch, the corresponding temperature of evaporation would be 381 degrees F. As some engineers rate the horsepower to a given number of square feet of heating surface, the following will serve for rough usage:

Locomotive	12 and 16 to 1 (natural draft)
Water tube	10 and 12 to 1
Tubular	12 and 14 to 1
Vertical	14 and 16 to 1
Flue type	8 and 12 to 1

SAFETY VALVE.

104. The safety valve should always be attached directly to the boiler; it should be placed on the main steam pipe, or be so situated that it can be cut off at any time. The size of the safety valve should be sufficient to permit the free escape of the excess steam, discharging it so rapidly that very little or if any increase in the pressure of the steam can take place regardless of how fast the steam is generated. The safety valve should have a large area for the escape of the steam with a small lift of the valve, otherwise the pressure of the steam may creep up considerably before the valve lifts sufficiently to discharge the steam. It is money well expended to place on each boiler two safety valves, with one set to blow off about 5 pounds beyond the other safety valve. If one safety valve gets out of order from any cause, then the other safety valve acts as an emergency valve, and when it blows off it indicates that the other safety valve is out of order.

HEATING FEED-WATER.

105. Mix hot water with cold water and the result will be that the temperature of the hot water decreases, while the temperature of the cold water increases. The feed-water furnished to a steam boiler should be heated to the normal temperature to that of steam. If the feed-water is fed to the boiler at 60°, it has to be heated from this temperature to that of the steam before evaporation can commence, and this means not only more fuel, but a reduction in the capacity of the boiler. A feed-water heater, where the water can be heated by the exhaust steam, or heated by the chimney gases, should be used to heat the feed-water before it is injected into the boiler. Aside from the above the feed-water heater, if the water is heated hot enough, will tend to remove some of the foreign substances, which exist in the water. Nearly all waters contain foreign substances in greater or less degree, and when the water is evaporated, the impurities remain in the boiler, being removed by blowing-off and washing out the boiler, and the latter can not be done too well, and should always be done when the boiler is cold.

The presence of scale or sediment in a steam boiler results in the use of more fuel, cracking of the plates, and leads to boiler repairs and explosions. It is estimated that $\frac{1}{16}$-inch of scale causes a loss of 13 per cent of fuel; $\frac{1}{4}$ inch causes a loss of 38 per cent, and $\frac{1}{2}$ inch causes a loss of 60 per cent. The Railway Master Mechanics' Association of the United States estimates that the loss of fuel, extra repairs, etc., due to incrustation, amount to an average of $750 per annum for every locomotive in the Middle and Western states.

SEPARATOR.

106. In power plants where steam pipes extend from the boiler to the engine, it is well to place on the main steam pipe a separator, which will separate the water (the steam which condenses) from the steam as the latter passes from the boiler to the engine, etc. It is well known that the steam pressure along a steam pipe of considerable length is not the same throughout its length. The steam pressure in that part of the steam pipe furthest from the boiler will be less than that part of the steam pipe adjoining the boiler. The cooling of the steam enroute through the steam pipe causes more or less water to be in the steam pipe; hence, the separator to separate the water from the steam. When making equation of pipes it is well to bear in mind the velocity of the steam. The velocity of the steam will depend upon the size of the pipes and the number of angles. The friction is more in evidence in a small pipe than in a large pipe. To figure the area of the pipe desired for the main steam pipe, caring for reasonable resistance, etc., the velocity of the steam should be taken at about 85 feet per second, or 5,100 feet per minute.

Pipes are measured from their inside diameters, while flues are measured from their outside diameters. Pipes are less uniform in diameter than flues, and calculations in regard to pipes may be upset, due to the diameter varying from the nominal diameter. Each boiler should be equipped with a valve so as to cut the boiler off from the main steam pipe to which all the boilers, if there are a battery of boilers, are connected. This will permit the boiler to be cut out of service to make repairs, inspections, etc., without taking the other boilers out of service. When several boilers compose a battery, the pressure of each boiler should be as near alike as practicable, and when a boiler has been cut out of service, its steam pressure should be the same as the steam pressure of the other boilers before the valve to the main steam pipe is opened. Since water is practically incompressible, it will, when traveling with the steam, differ little from that of a solid body of equal weight; hence, will impart its weight against the elbows, valves, etc., and cause what is termed a HAMMER KNOCK, which frequently ruptures a pipe. Turning steam too rapidly into cold pipes will also rupture them.

LAYING OUT

LAYING OUT BY PARALLEL LINES

DRAFTING TERMS

INTRODUCTION.

1. The process of making from a drawing of a form a pattern upon a flat surface is called a DEVELOPMENT of the surface. To read a drawing a common understanding of drafting must first be acquired. The front view or the geometrical projection of a boiler or other object on a plane perpendicular to the horizon is called an ELEVATION. An elevation may be called front, side, end or rear, according to the dimensions of the object, one of whose faces it represents. The representation of the boiler as it would appear if cut by the horizontal plane is called the PLAN VIEW. The name applies equally as well to a top view as a horizontal section. The representation of the object as it should appear if cut in two – through any plane, vertical, horizontal or oblique – is called a SECTIONAL VIEW. Generally the view is made known, such as section AA, etc.

A drawing made less than full size of the object, each part drawn in proportion, is called a SCALE DRAWING. A drawing of a part, said drawing being made full size or to a scale generally greater than used for the elevation, is called a DETAIL DRAWING.

THE PERSPECTIVE DRAWING.

2. The representation by a drawing made on a flat surface of solid objects or surfaces conceived of as not lying in that surface; the delineation of objects as they appear to the eye, is called a PERSPECTIVE DRAWING. In perspective the eye is supposed to carry a definite point, called the POINT OF SIGHT, and the picture is supposed to be at right

angles to the line of vision in a plane called the PLANE OF DELINEATION.

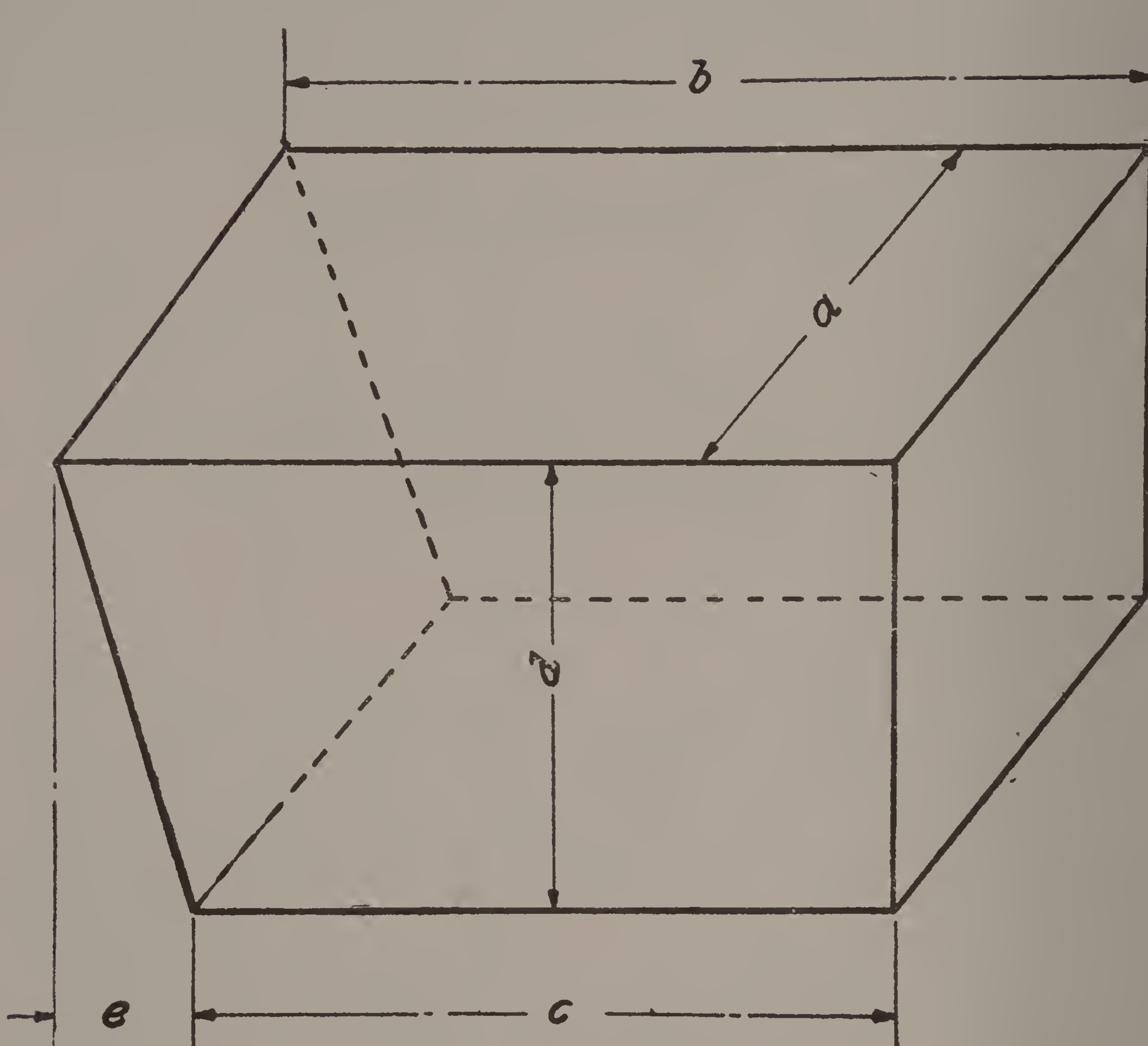

Fig. 1.

In Fig. 1 is shown a form of perspective drawing, though the dotted lines, which represent unseen edges, are usually omitted. The outline or contour of a vertical section through a line of work, showing actual or projected elevation and hollows, is called a PROFILE.

PRINCIPLES OF LAYING OUT.

TAKE-UP IN ROLLING.

3. When a sheet is changed from a flat to a curved surface the sheet at one and the same time is subjected to both compression and stretching. Since one is directly the opposite of the other, it follows that

the foregoing must be considered when figuring the circumference for a given diameter.

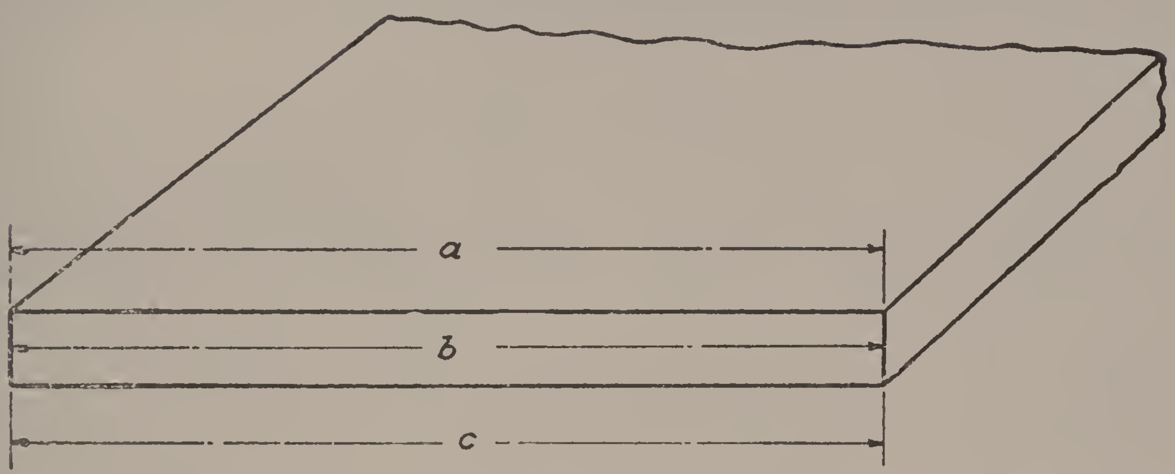

Fig. 2.

In Fig. 2 the distance *a*, *b*, and *c* are the same. However, curve the sheet as shown in Fig. 3, and the distance *a* inceases, while the distance *c* decreases. Every circle, regardless of the diameter, has 360°, and as will be noticed, while the distance *a*, *b*, and *c*, each have the same number of degrees, each has a different diameter; hence, a different length.

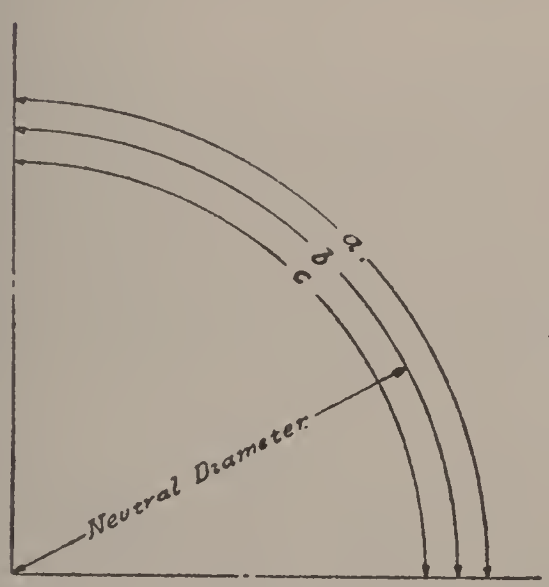

Fig. 3.

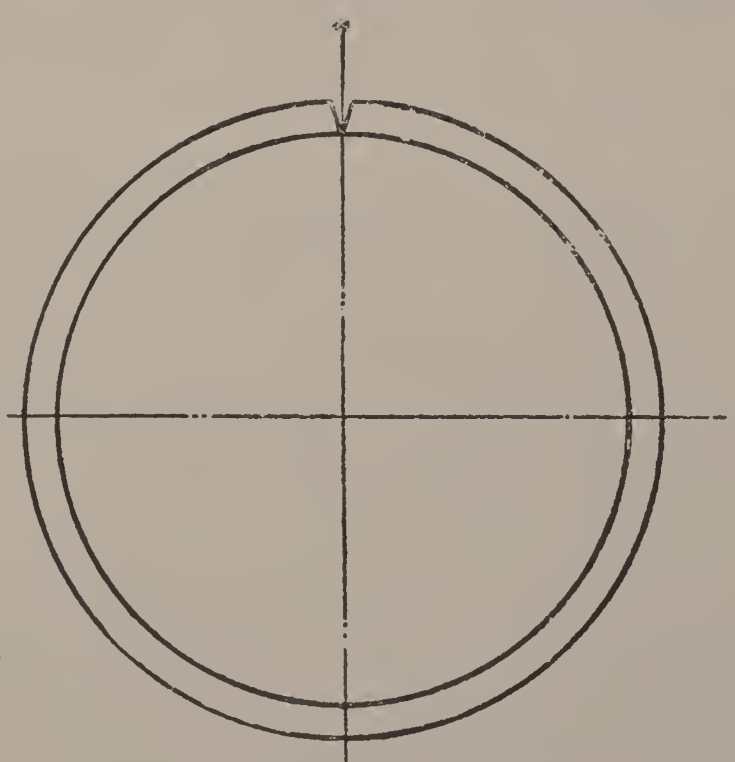

Fig. 4.

Since rolling the sheet causes the distance *a* to increase and the distance *c* to decrease in proportion, there naturally is a point that is neutral – that is, does not lose or gain. Practice has brought out that for all practicable purposes this point can be considered as in the middle of the plate; hence, the expression, NEUTRAL DIAMETER, as shown in Fig. 3.

With very heavy plate, 1½ inches or more in thickness, a slight V opening, as shown in Fig. 4, will occur. This, however, is cared for by slightly beveling the sheets prior to rolling. This feature may not be considered with commercial sizes, say 1¼ inches and less in thickness.

THE CIRCUMFERENCE.

4. Many boiler makers figure out the circumference by multiplying the constant 3.1416 by the inside diameter, and add three thickness of plate for the take-up in rolling. Others multiply the constant 3.1416 by the outside diameter, and take off three thickness of plate for the gain in rolling. Neither of these rules are well to use, the better practice being to multiply the constant 3.1416 by the neutral diameter, which is readily found by adding to the inside diameter of the structure one thickness of plate.

The latter is the best as it is as near accurate as possible, and further, the circumference ascertained requires no additions or deductions, except such allowances as are made for a loose fit.

A plate is naturally rough, and its thickness not uniform. The variation in the thickness may be inappreciable, though every plate is thicker in the center than at its edge. This is due to the spring in the rolls; the greater the width of the sheet and the lighter the thickness, the greater the variations.

5. The commercial sheet nowadays does not vary to the extent that a special rule is necessary in every case. With steam-tight work and a two or more course structure, the circumference for both the large and small courses may be figured out by multiplying the constant 3.1416 by the respective diameters. Then, to permit the courses to be readily connected together, a slight addition to the large course, or a small deduction from the small course might be made, but made prior to spacing off the rivet holes in the girth seam.

In structures, such as stacks, stand pipes, etc., a greater allowance may be made than in the foregoing case. The difference in the circumference of the large and the small courses, when said circumferences are found by the neutral diameter method, is 6.28 times the thickness of the plate, the assumption being that both plates are the same thickness. In steam-tight work this may be made as great as 6.5 and in stack work as great as 7 times the thickness of plate.

For instance: Assuming the circumference for a structure to be 191.6376 inches for the large course, ½ inch plate, the circumference for the small course may be found for a very tight fit by merely subtracting from 191.6376 inches, $6.28 \times .5 = 3.1416$ inches, thus $191.6376 - 3.1416 = 188.496$ inches, say 188.5 inches. Ordinarily this would be written $191.6376 - (6.28 \times .5) = 188.496$ inches.

If a reasonable loose fit is desired, raise the constant from 6.28 to 6.5, making a deduction of $6.5 \times .5 = 3.25$ inches, instead of 3.1416 inches. Or, if a very loose fit is desired raise the constant to 7, making a deduction of $7 \times .5 = 3.5$ inches, instead of 3.1416 inches.

DEVELOPING A SQUARE PIPE CUT OFF AT AN OBLIQUE ANGLE.

6. The development of a plain pipe, as shown is Fig. 1, merely requires taking the distances *a*, *b*, *c* and *d*, and arranging them on the plate, so when it is cut out and formed it will be the shape desired.

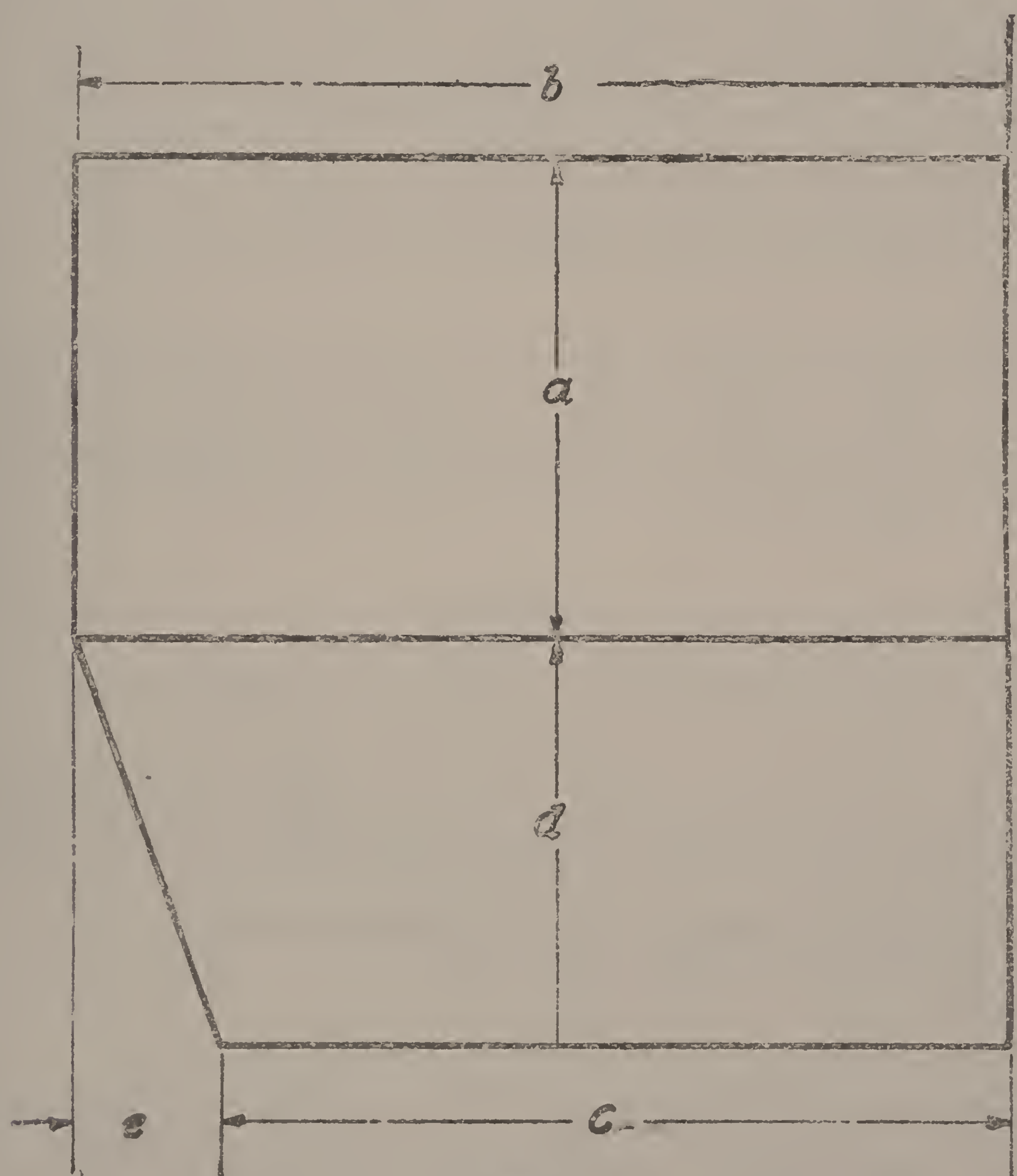

Fig. 5.

The half pattern, as shown in Fig. 5, is developed by drawing the three horizontal lines, making two of these equal in length to the distance *b*, Fig. 1, and the other line equal to the distance *c*. The vertical distances *a* and *b* between the lines, Fig. 5, are made to correspond to the corresponding distances, Fig. 1. The distance *c*, Fig. 1, represents the

number of degrees, or the cut off. The distance *c* and *e*, Fig. 1 and 5, should correspond, and the distance *b* should correspond to the total of *c* and *e*.

Note: The thickness of the plate is not considered, the whole aim, in the early part of the paper, being to bring out the principles of development.

DEVELOPING A ROUND PIPE CUT OFF AT AN OBLIQUE ANGLE.

7. In developing the square pipe, Fig. 1, but few measurements were required, but with the round pipe, as shown in Fig. 6, many lines are required. To secure data for laying out the pattern divide the semicircle into any number of equal spaces – in this case six – and from the points 1 to 7 inclusive draw horizontal lines, as shown. Though the distances between the horizontal lines are alike, they do not in the side elevation so appear, and, because of the round surface and the eye in a fixed position.

The lines *a* and *b*, Fig. 6, as well as all the horizontal lines between them, are shown their true length. To develop the half pattern, Fig. 7, draw the stretchout outline *M N* of indefinite length, making the distance *c* between the outer lines equal to the distance between points 1 to 7 of the end elevation, Fig. 6.
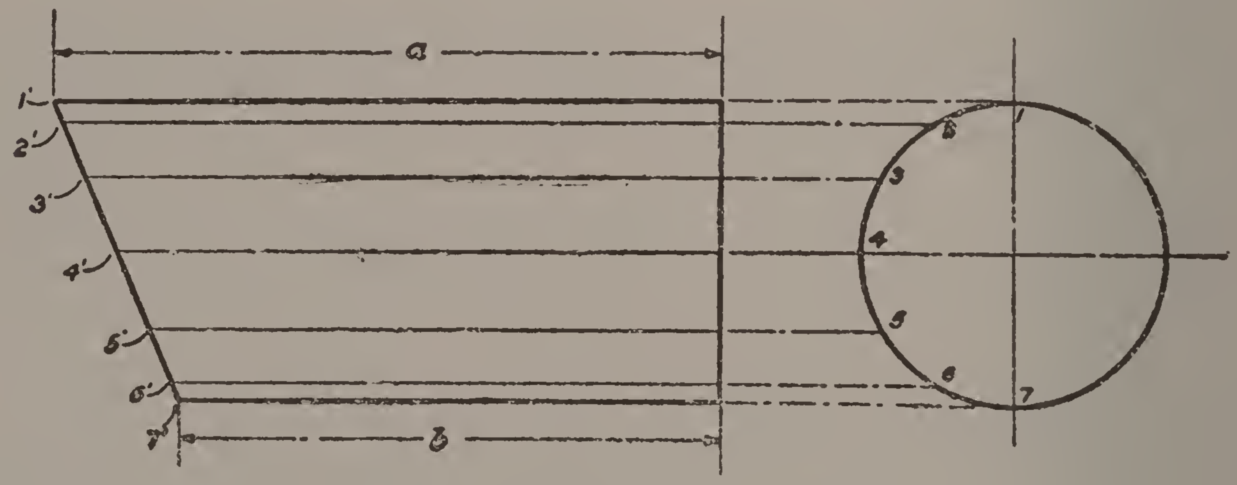
Fig. 6.

Next divide the distance *c*, Fig. 7, into six equal spaces, each space numbered to correspond in length with the corresponding horizontal lines of the side elevation, Fig. 6. Following the locating of the points 1′ to 7′ inclusive, draw the irregular or camber line, and the half pattern, less laps, rivet holes, etc., is complete. However, it is customary to develop both halves at once, working from a common center line, which should be directly opposite the location of the seam or joint, and as the latter may be selected at different points, it follows that the center line selected may be any one of the horizontal lines, as shown in the side elevation, but in

this case the top line is considered the center line, thus causing the seam to be located at the extreme bottom.

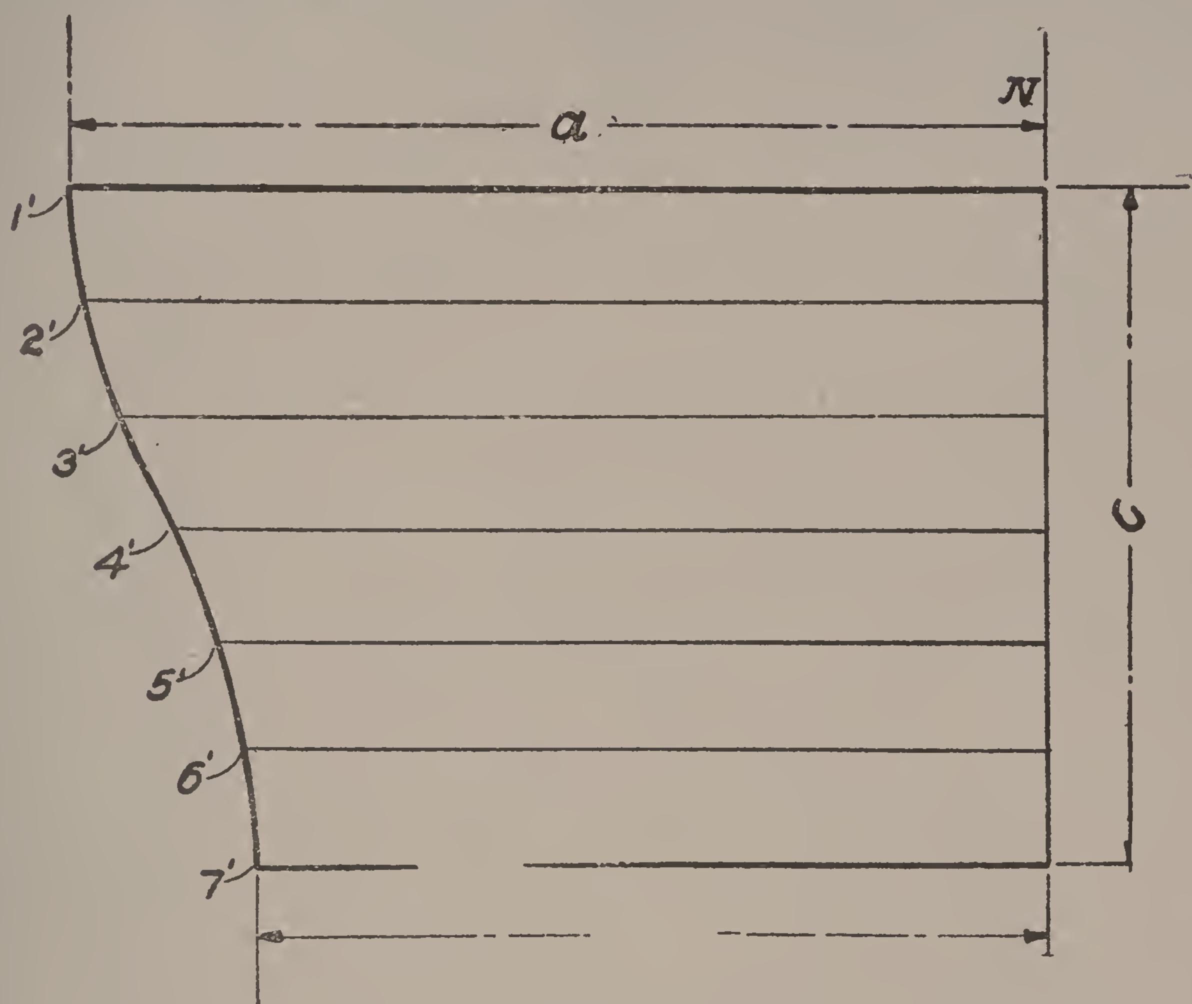

Fig. 7.

DEVELOPING A SQUARE PIPE FITTING OVER THE RIDGE OF A ROOF.

8. The development of a square pipe fitting over the ridge of a roof, etc., as shown in Fig. 8, is accomplished by drawing up the side elevation

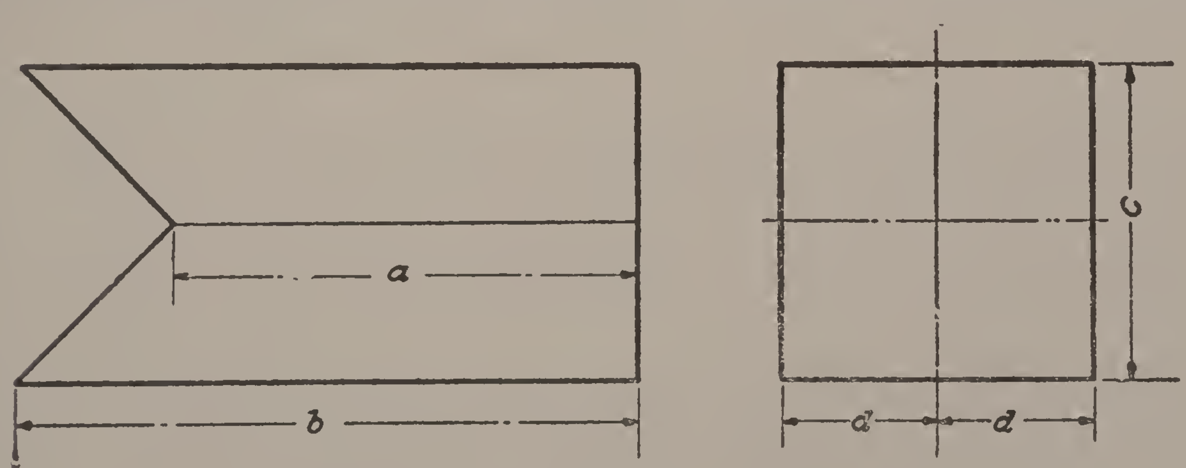

Fig. 8.

and the end view, and carefully noting the measurements, *a*, *b*, *c* and *d*. In this case the measurement *d* is one-half of *c*.

To develop the half patterns, as shown in Fig. 9, draw the stretchout line *M N* of indefinite length, and then lay off the four equal spaces, making the distance between the lines equal to the measurement *d* of the end view, Fig. 8. From the points located on the stretchout line *M N*, Fig. 9,

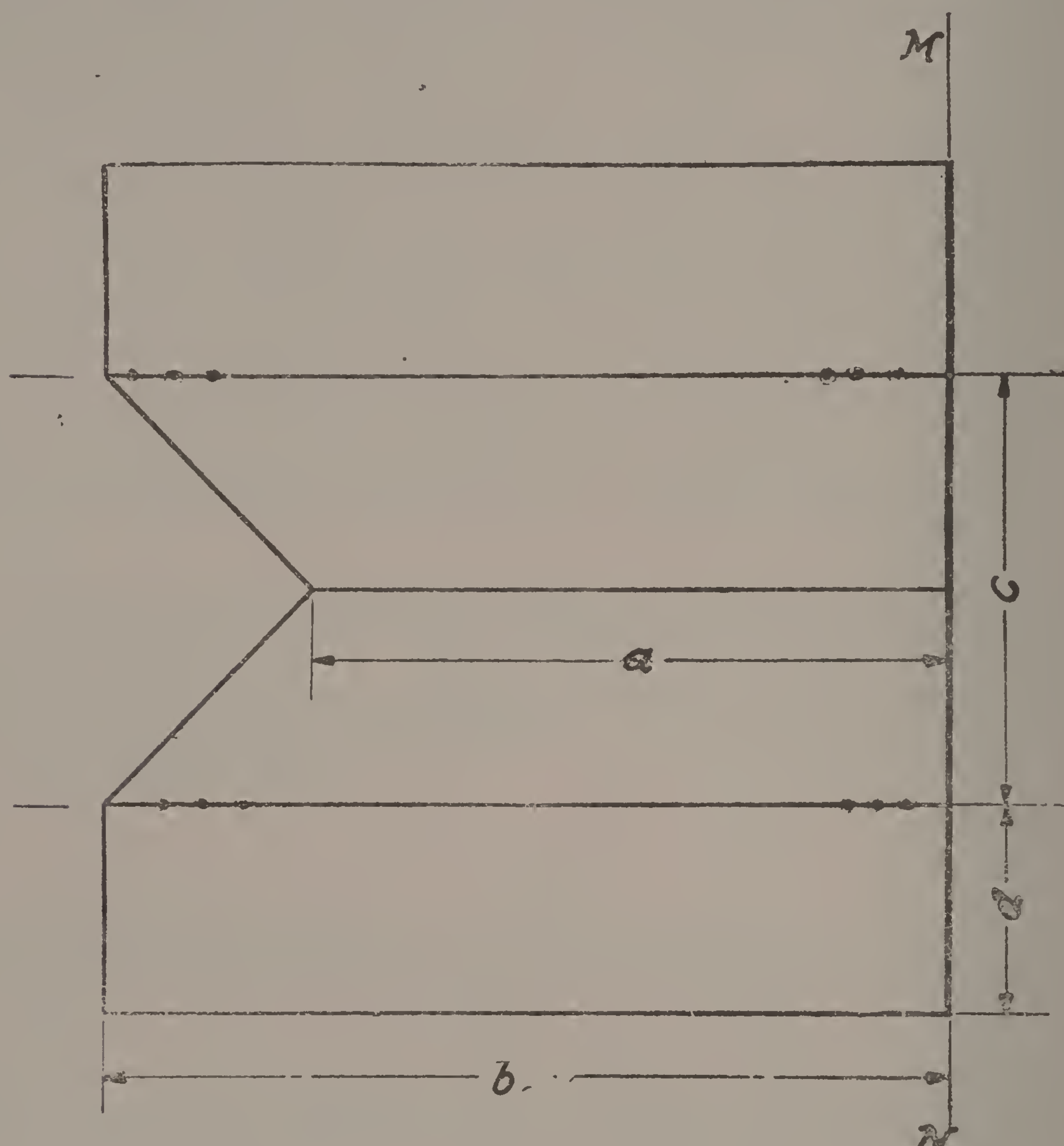

Fig. 9.

project horizontal lines, making the center line *a* equal to the distance *a*, Fig. 8. The other horizontal lines, Fig. 9, are made equal in length to the distance *b*, Fig. 8, and then connecting lines are drawn and the half pattern, less laps and rivet holes, is complete.

DEVELOPING A ROUND PIPE FITTING OVER THE RIDGE OF A ROOF.

9. The developing of the surface of a round pipe fitting over the ridge of a roof, etc., as shown in Fig. 10, is similar to developing the square pipe as described in Art. 7. The side and end elevation are drawn as usual, after which the semi-circle, and elevation, is divided into any

number of equal spaces – in this instance divided into six spaces; the points are numbered from 1 to 7 inclusive.

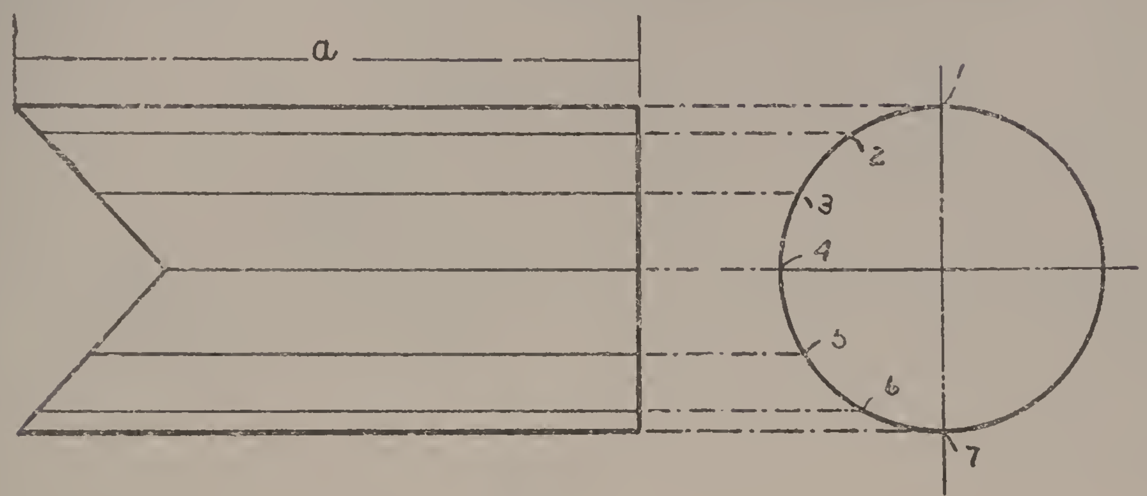

Fig. 10.

From the points, end elevation, project horizontal lines to the side elevation, as shown. The distance *a* is the over-all distance, though all the horizontal lines are shown their true length.

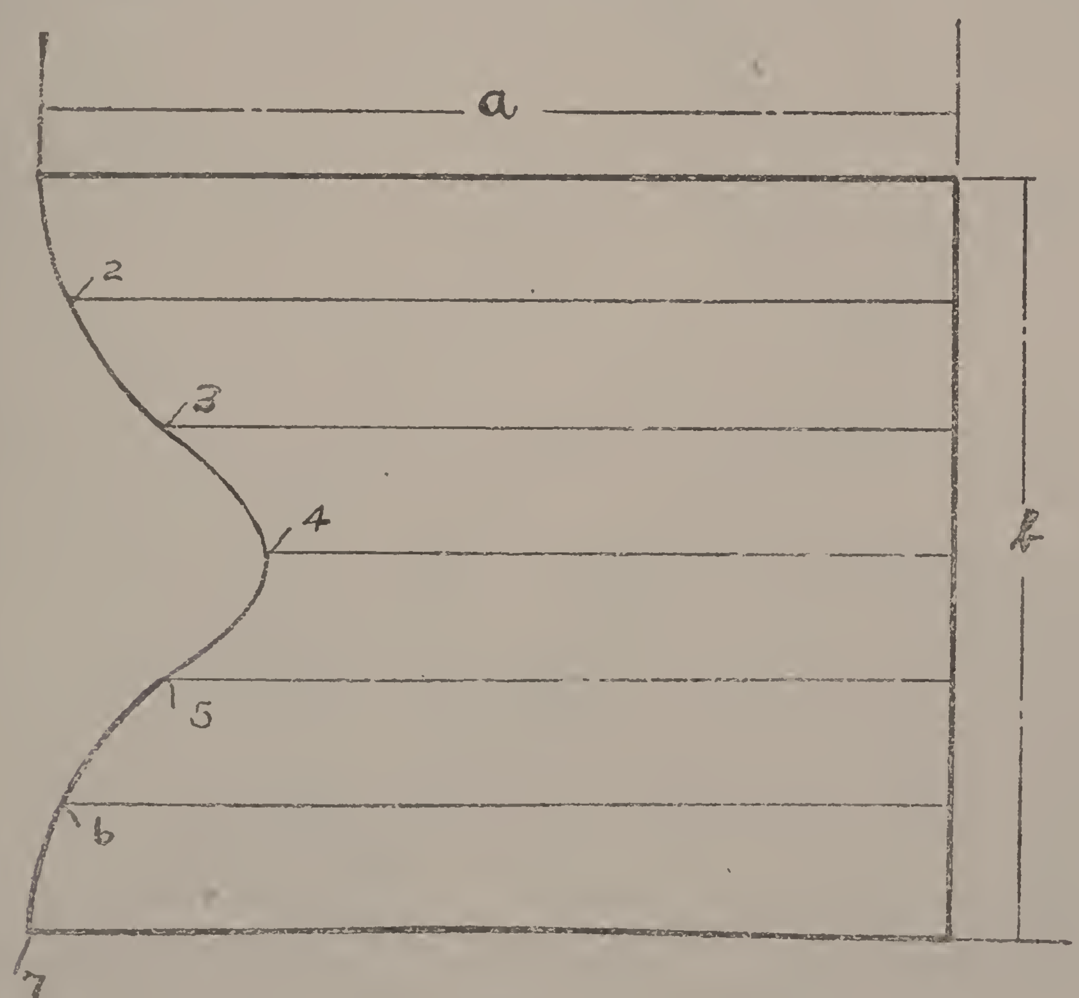

Fig. 11.

To develop the half pattern, Fig. 11, draw the stretchout line *M N* of indefinite length, making the distance *b* equal to one-half of the circumference of the pipe, or equal to the distance 1 to 7, Fig. 10. Then divide the distance *b*, Fig. 11, into six equal spaces, which will correspond with the spaces in the side elevation, Fig. 10. From the points located on the

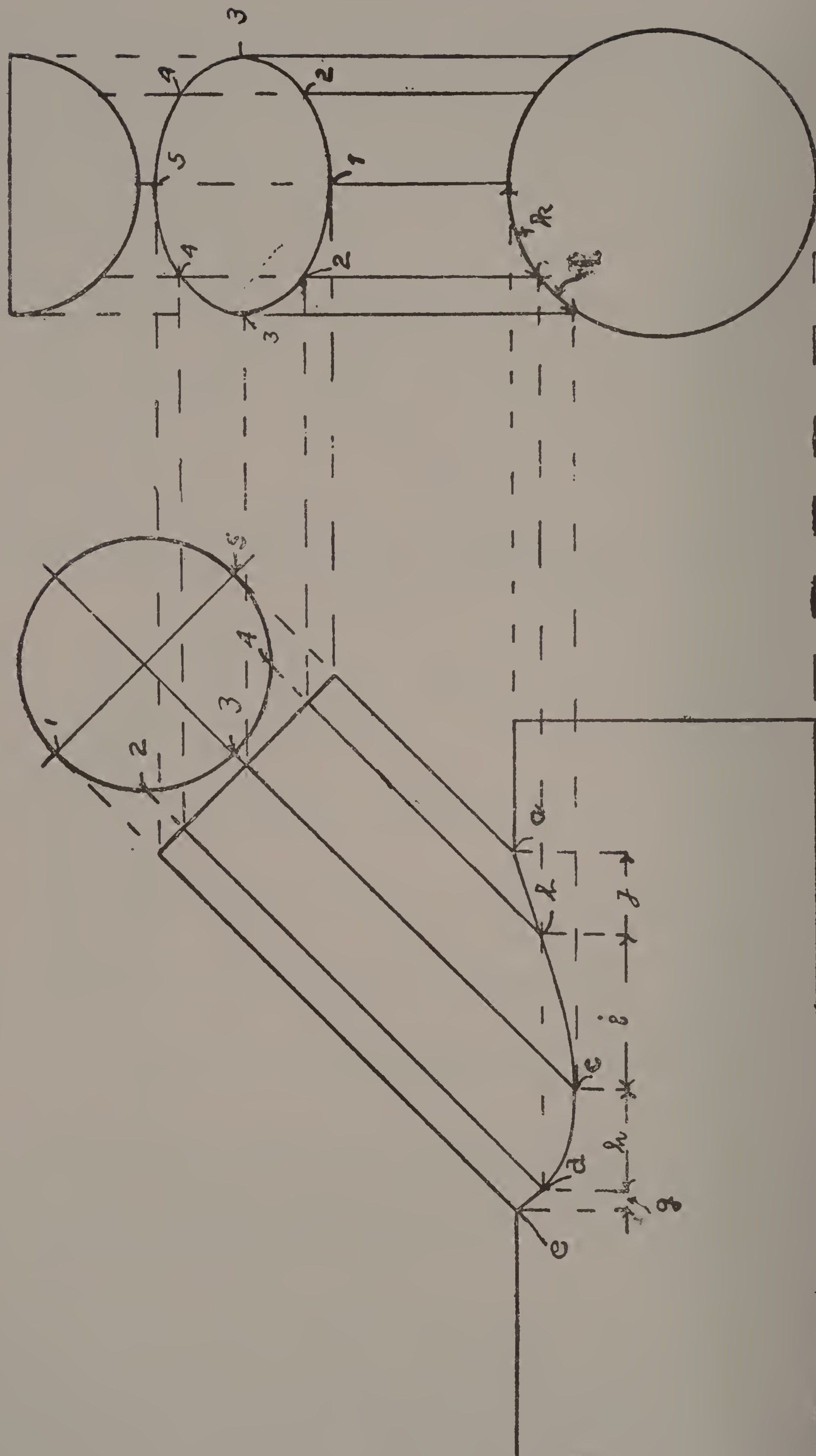

Fig. 12.

stretchout, Fig. 11, horizontal lines are projected and made to correspond in length to corresponding lines of the side elevation, Fig. 10. The irregular line, Fig. 11, from 1 to 7 is then drawn and the half pattern, less laps and rivet holes, is complete.

THE JOINT BETWEEN TWO PIPES OF DIFFERENT DIAMETERS INTERSECTING AT OTHER THAN RIGHT ANGLE.

10. To develop the branch pipe, as shown in Fig. 12, draw the end and side elevations. The end elevation – that is, the hole of the end elevation, must be developd from data procured from the side elevation.

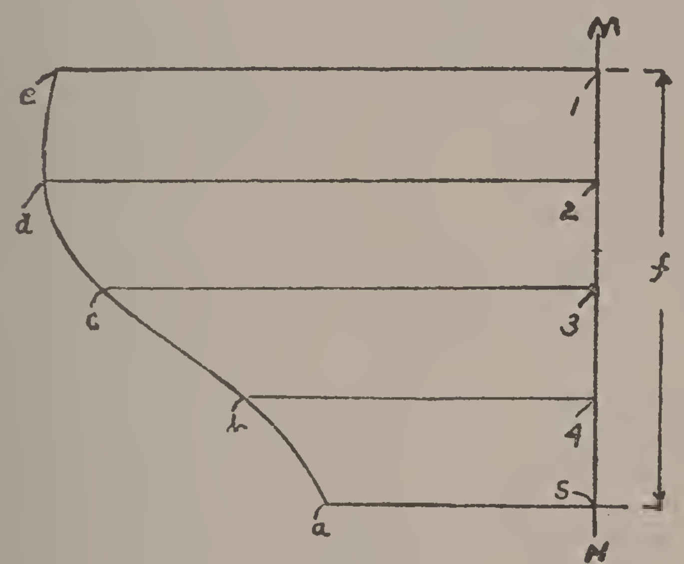

Fig. 13.

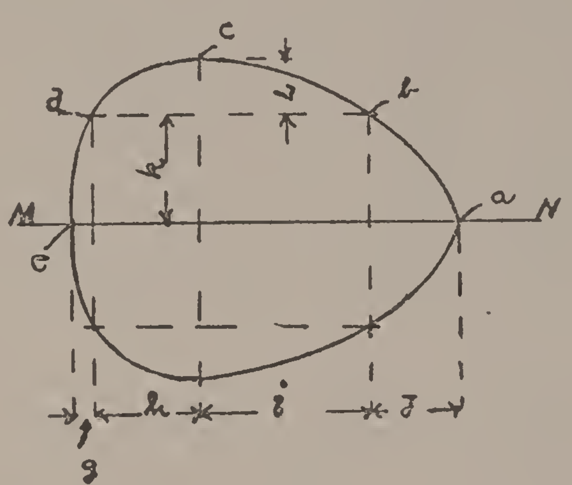

Fig. 14.

First draw the outline, side elevation, and then the circle. Divide the circle into any number of equal spaces – in this case four spaces, numbered 1 to 5. From these points extend slant lines, as shown.

To develop the elliptical hole, as shown in the end elevation, draw the semi-circle, dividing it off into the same number of equal spaces as the semi-circle, side elevation. From the points of the semi-circle, side elevation, project horizontal lines intersecting the vertical lines projected from the points of the semi-circle of the end elevation. Through the points 1, 2, etc., end elevation, draw the shape of the hole. The vertical lines in addition also serve to develop the irregular curve from *a* to *b*, etc., side elevation. This is accomplished by projecting the vertical lines from the semi-circle until they intersect the lower circle. From these points horizontal lines are projected to the side elevation and to intersect the slant lines, creating the points *a*, *b*, *c*, *d* and *e*.

The half pattern, Fig. 13, is developed by first drawing the stretchout line *M N*, making the distance 1 equal to one-half of the circumference of the branch pipe. The distance *f* should be divided into four equal spaces, numbered from 1 to 5, all to correspond to the spaces and the numerals of the semi-circle of the side elevation. From the points on the stretchout

line M N project horizontal lines to correspond in length with the slant lines of the branch pipe, thus locating the points, a, b, c, d and e, Fig. 13. Draw connecting lines and the pattern, less laps and rivet holes, is com-

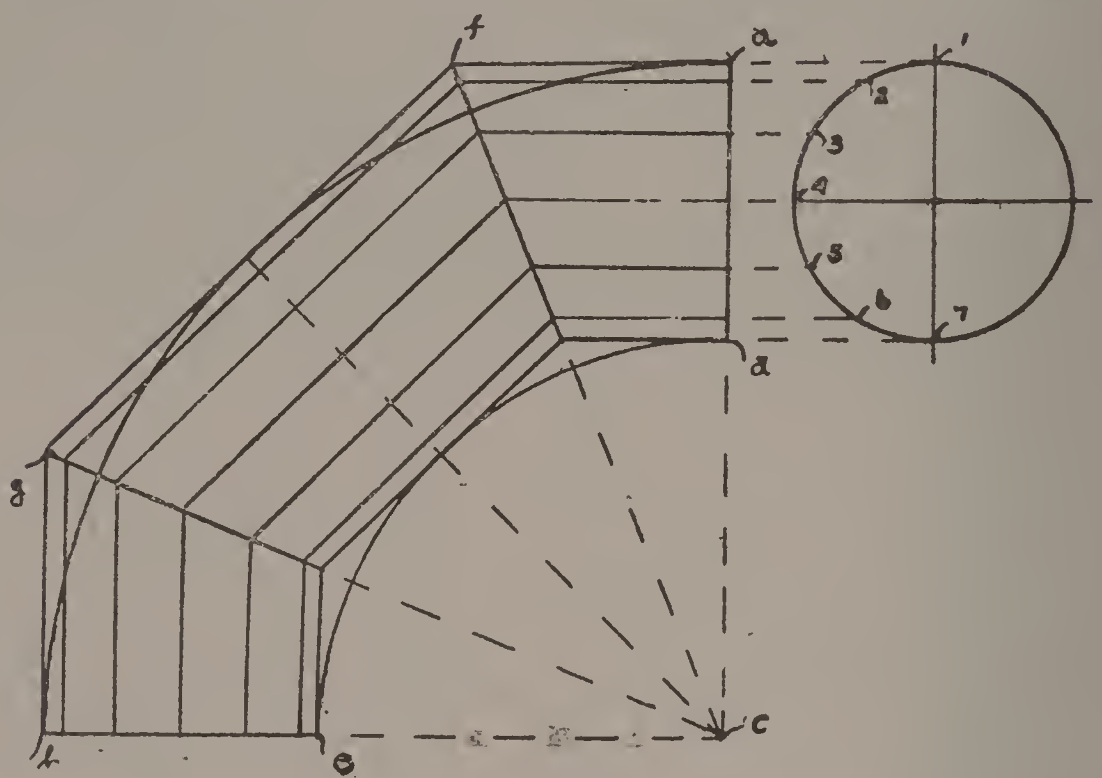

Fig. 15.

plete. To develop the hole in the large cylinder course, draw the stretch-out line M N, Fig. 14, and set off the distance from a to c equal to corresponding distance, Fig. 12. Also make the distances g, h, i and j, Figs. 12 and 14 to correspond. The distances k and l are then taken from the

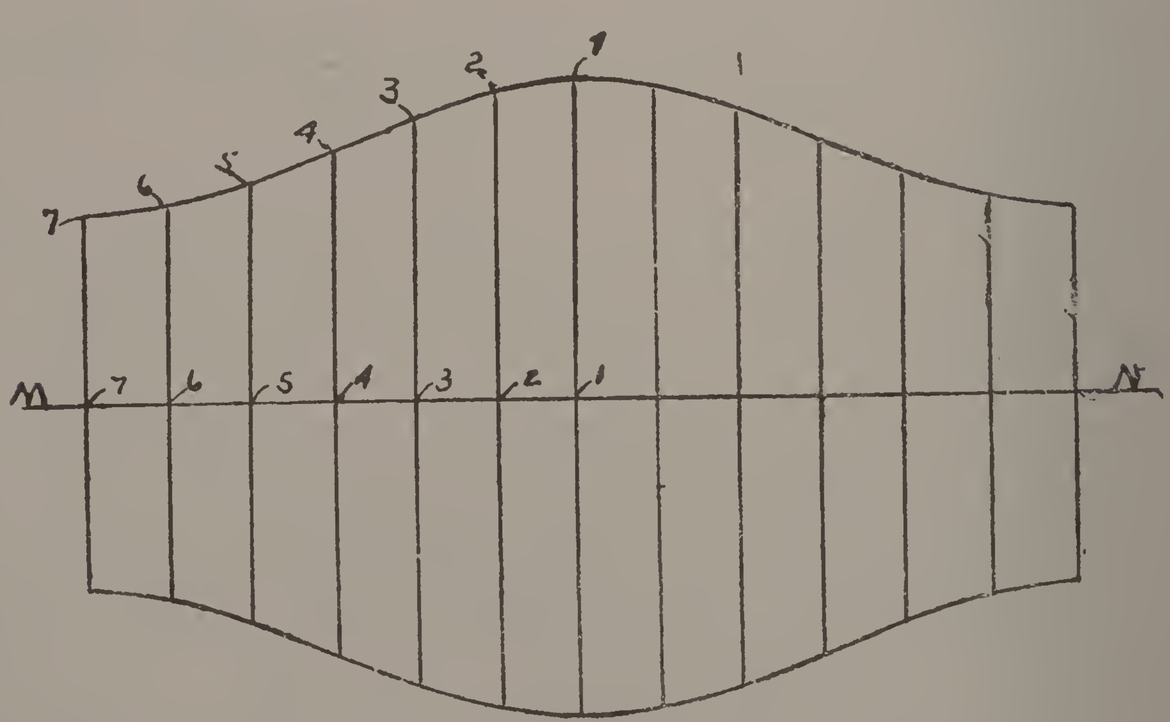

Fig. 16.

end elevation, Fig. 12, and laid off, as shown in Fig. 14, thus locating the points a to e inclusive. The irregular curve is then drawn and the hole developed.

THE DEVELOPMENT OF A THREE-PIECE 90° ELBOW.

11. To develop the patterns for a three-piece elbow, Fig. 15, draw the two quadrants as shown. Then divide the quadrant *a b* into four equal spaces, and from the newly found points draw the dotted lines to the apex *c*. There is no need of dividing the quadrant *d e* as the equal spaces on it are located when the dotted lines are drawn.

From the points *a d* project horizontal lines until they intersect the dotted line *c f*. From the points *b c* project vertical lines until they intersect the dotted line *c g*. Then draw the connecting 45° slant lines as shown. The semi-circle is next drawn and divided into any number of equal spaces – in this instance six spaces, numbered from 1 to 7. From these points project horizontal lines to the line *c f*, and then slant lines, all parallel, to line *c g*, and then vertical line to line *b c*. Usually the data is all taken from one section, as will be hereinafter explained.

12. To develop the pattern, Fig. 16, which is the center course, draw the stretchout line *M N*, spacing off on it twelve equal spaces; said spaces to correspond with the spaces of the semi-circle, Fig. 14. Then from the newly found points, Fig. 15, which are numbered 1 to 7, project vertical lines on each side of the stretchout line *M N*, and make their lengths to correspond with the corresponding lengths of the slant lines of the center course Fig. 14. Then draw the irregular curve, Fig. 16, through the points 1 to 7, and the pattern, less laps and rivet holes, is complete. It will be noticed that by cutting the pattern, Fig. 16, in two – that is, through the line *M N*, the end pieces are obtained, or in other words, two full patterns, one cut as described, will give the three pieces for the elbow, Fig. 15.

LAYING OUT A DOME.

13. When laying out the dome of a boiler the thickness of the material must be considered, and contrary to the general rule the measurements must be taken from the lengths of the lines determined by the inside diameter – not by the lines determined by the neutral diameter as is the general rule. In Fig. 17 is shown the dome and a portion of the cylinder to which it is to be attached. Probably every boiler maker recalls flanging a dome or similar structure to strictly the flange marks, yet the dome would not fit the cylinder or shell – would have an opening at the top, said opening gradually tapering off to nothing at the sides, or else the dome would rock.

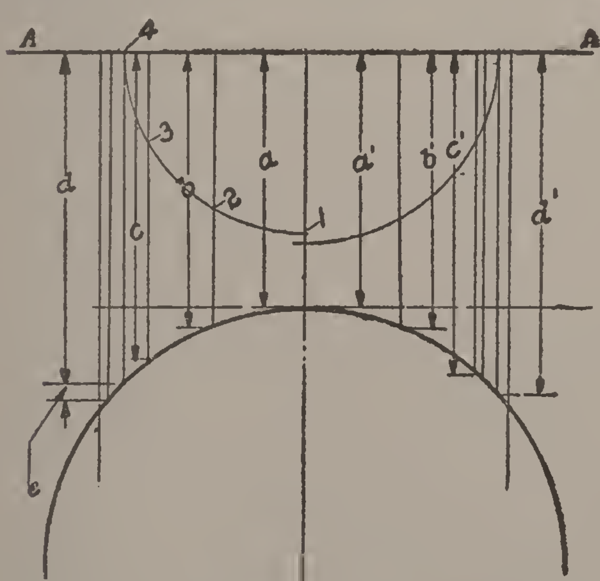

Fig. 17.

The trouble, however, in such cases

is due to the flange marks not being properly placed – that is to say, the dome was incorrectly laid out. The flanging of the dome to the supposed correct line, and then the alteration thereof, not only requires the flanging of the dome to be done over in part, but requires the metal to be unduly worked, which adds nothing to its strength.

14. To correctly lay cut the dome – that is, correct as far as practical purposes is concerned, draw up the profile as shown in Fig. 17. Then draw the inside quadrant as shown, after which divide it into as many equal spaces as desired – any amount – in this case three equal spaces, numbered from 1 to 4 inclusive. From these points and through them project vertical lines intersecting the horizontal line *AA* and the top portion of the cylinder, which is indicated by a part of a circle; the lengths of the lines drawn are indicated by the letters *a*, *b*, *c* and *d*.

15. The quadrant is not drawn to the neutral thickness of the plate for the reason that the flange marks, which should be on the inside of the dome body, want to be located so that when the dome is flanged it will fit the shell, except minor irregularities. If the quadrant is drawn to the neutral thickness of the plate, then line *a* will be the same length as line *a′*, but lines *b′*, *c′* and *d′* will not be the same as lines *b*, *c* and *d* – in fact the line *d′* will be the distance *e* greater in length than line *d*, and just that amount out.

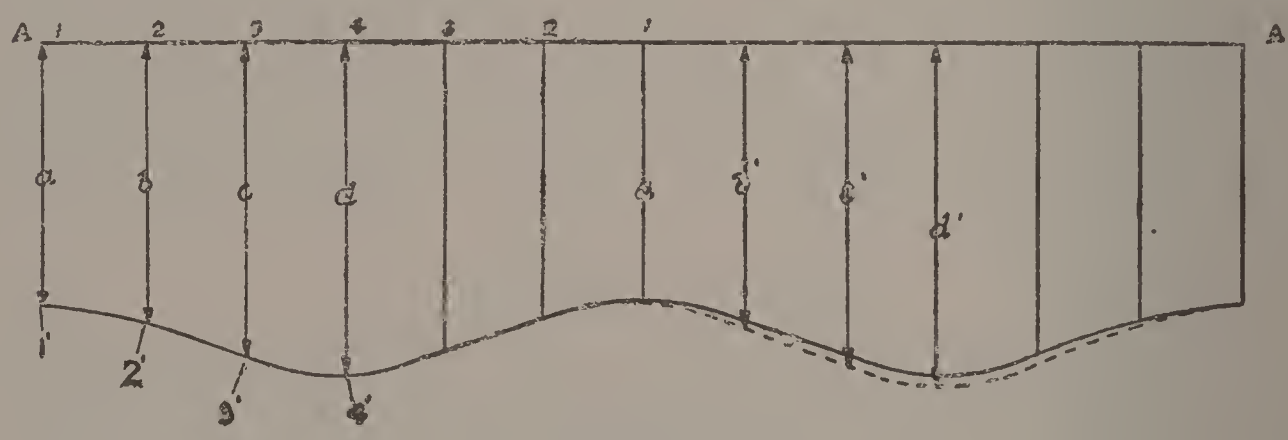

Fig. 18.

16. To lay out the pattern, Fig. 18, draw the stretchout line *AA* of indefinite length, after which step off on it the equal spaces as shown, making the space between points *1* and *2* equal to one of the equal spaces of the quadrant to the neutral thickness of the plate, as shown in Fig. 17. Special attention is directed that the spaces are taken from the quadrant drawn to the neutral thickness of the plate. In practice this is not done; the general rule is to ascertain the circumference by multiplying the constant 3.1416 by the neutral diameter, and then divide the product by the number of spaces. The whole object of drawing the quadrant to the neutral thickness of the plate and placing in lines *b′*, *c′* and *a′* is to make clear why the dome does not properly fit.

Following the spacing of the points on the line *AA*, Fig. 18, project from the newly found points and at right angles (90°) to the line *AA*

the vertical lines *a*, *b*, *c* and *d*, and make their lengths to correspond with the corresponding lines, Fig. 17. Points *1'*, *2'*, *3'* and *4'*, Fig. 18, are found by this method of procedure. Attention is directed to the dotted lines on part of the pattern, Fig. 18. These lines indicate how the dome would be laid out had the measurements *a'*, *b'*, *c'* and *d'* been used instead of the measurements *a*, *b*, *c* and *d*. This readily illustrates the remarks in Art. 13. Following the locating of all the points (when one quarter has been developed the data for the other quarters has also been secured) then add for the flange and the lap, installing the center punch marks for the rivet holes and the pattern is complete.

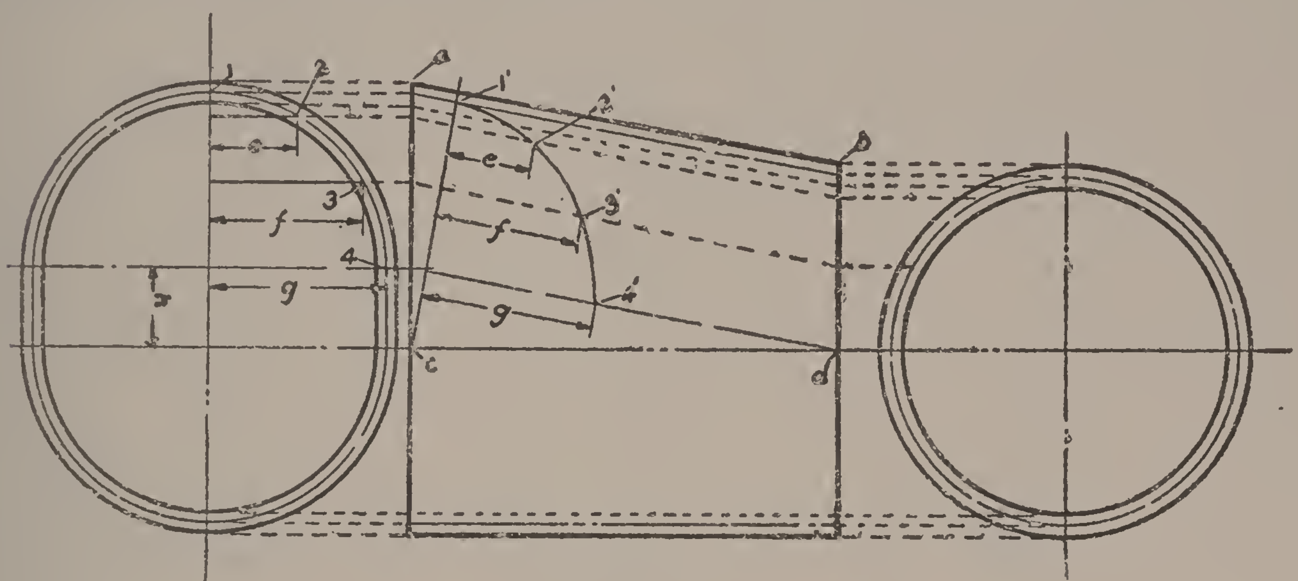

Fig. 19.

LAYING OUT A FLARING TRANSITION PIECE.

17. The transition piece as shown in Fig. 19 is of that shape, in this instance, that it can be laid out by the parallel line method. However, if the minor diameter of the oblong end and the diameter of the round end do not agree, then the pattern should and can be best laid out by triangulation.

18. The respective end views are shown, though all the data could be secured from the side elevation and the one-half of the end elevation. To insure a clear understanding both end views are shown, it being expected that after the principles of laying out are required that the unnecessary parts as described will not be drawn up and used.

19. First draw up the side and end elevations, after which divide the quadrants into any number of equal spaces – in this case three equal spaces, numbered from *1* to *4* inclusive. Then the dotted lines as shown in the side elevation are drawn in, said lines to be parallel to the solid line from *a* to *b*. Next draw the slant line, which is at right angles to the line *a* to *b*, to the point *c*. The horizontal line from *c* to *d* marks what might be termed the division point between the upper and lower half of the transition piece. The lower half, as will be noted, is merely one-half of a round cylinder, and the method of laying out, since it has already

been described (see Art. 4), need not be taken up at present. The upper half, however, is of that character that it affords an opportunity to set forth very important features of a general character, which should be well understood as they are liable to present themselves in whole or in part from time to time.

The next step is to take the distances *e*, *f* and *g* of the end elevations, and using as starting points where the slant lines are intersected by the

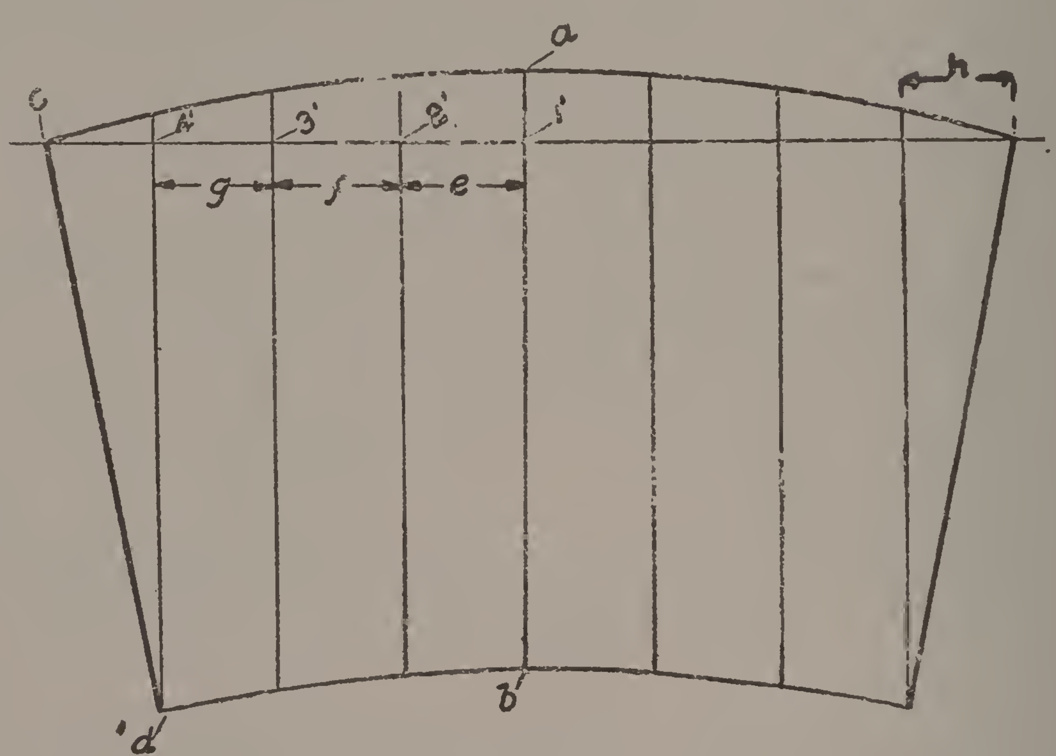

Fig. 20.

solid slant lines, lay off the respective distances on the dotted slant lines which are parallel to the solid slant line *a* to *b*, thereby creating the points *1′* to *4′* inclusive, side elevation. Though the drawing does not clearly indicate that the line *1′* to *4′* is irregular, it is nevertheless.

20. To develop the pattern, Fig. 20, make the line *a* to *b* equal to the line *a* to *b*, Fig. 19. Then draw the vertical parallel lines as shown in Fig. 20, making the distances *c*, *f* and *g* to correspond to the corresponding distances of Fig. 19. Next, draw the horizontal line from *c* to *c*, making the distance *a* to *1′*, Fig. 20, equal to the distance *a* to *1′* Fig. 19. The length of the dotted lines, Fig. 19, which are parallel to the solid line *a* to *b*, are taken and are located in regards to line *c c*, Fig. 20, as they are in the side elevation in regards to the slant line, which is at right angles to the line *a* to *b*.

The wedge-shaped section, Fig. 20, is the same as the wedge-shaped part shown in the side elevation; the distance *h*, Fig. 20, to correspond with the distance *h*, Fig. 19. The irregular lines are then drawn, and the development, less laps and location of rivet holes, is complete.

TO DEVELOP A TWO-PIECE 90° ELBOW.

21. To develop the patterns of a two-piece 90° elbow as shown in

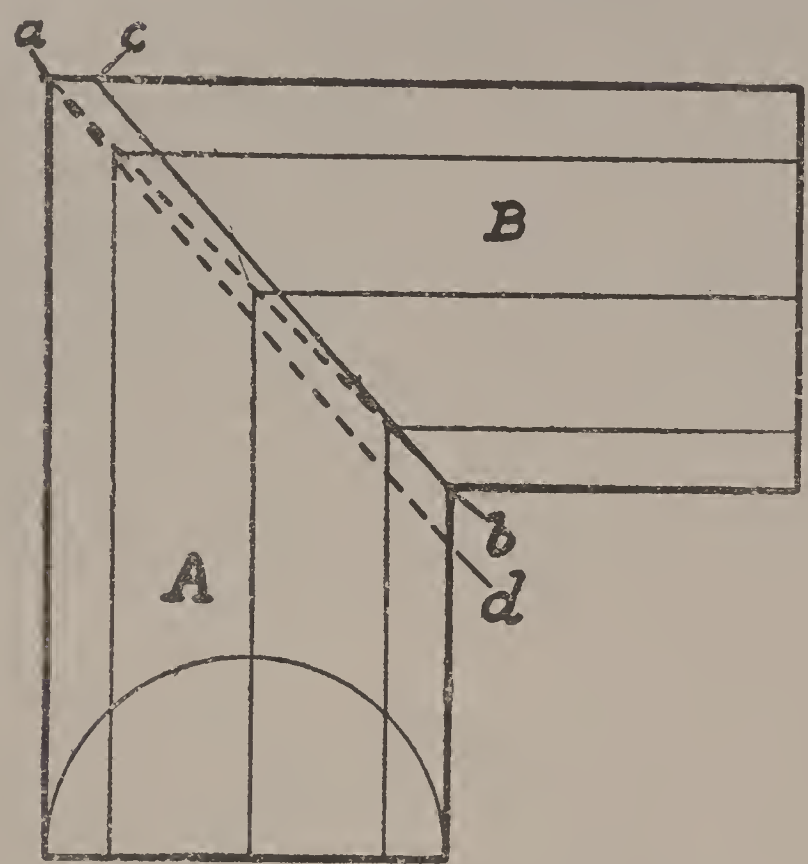

Fig. 21.

Fig. 21, requires the use of the same principles as used to develop the patterns for the three-piece elbow as described in Arts. 11 and 12. First

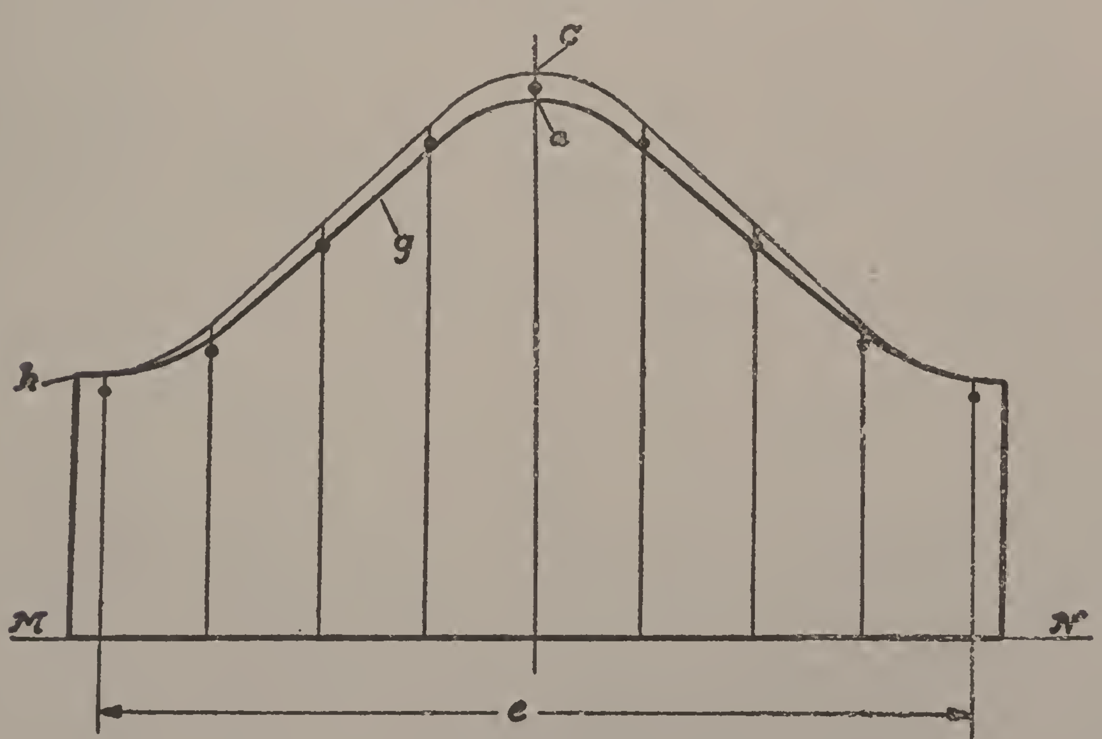

Fig. 22.

draw up the profile, drawing the semi-circle as shown and dividing it off as in former problems. Attention is directed to the miter line, *a* to *b*.

With the ordinary elbow the rivet holes are located on the miter line, but with a two-piece 90° elbow this is not practicable, therefore the patterns are laid out so that the line of rivet holes are not parallel with line *a* to *b*. The full lap on section *A* is allowed at the top (distance *a* to *c*), while the full lap of section *B* is allowed at the bottom (distance *b* to *d*), and the foregoing will be readily seen in the patterns, Figs. 22 and 23.

22. To develop the patterns, Figs. 22 and 23, draw the stretchout lines *M N*, and then figure out the respective circumferences. The circumference *c* of section *A*, Fig. 22, should be about $6\frac{1}{2}$ times the thickness of the plate greater in length than circumference *f* of Fig. 23. By this it will be noted that section *A* is the large course and section *B* the small course. The manner of developing the pattern up to the center lines *g* and *g'*, Figs. 22 and 23, is the same as developing the pattern, Fig. 16, as described in Art. 12. Refer to Fig. 23 and it will be noted that the distance between *a* and *c* is the same as *a* to *c*, Fig. 21, and that the lap allowed gradually

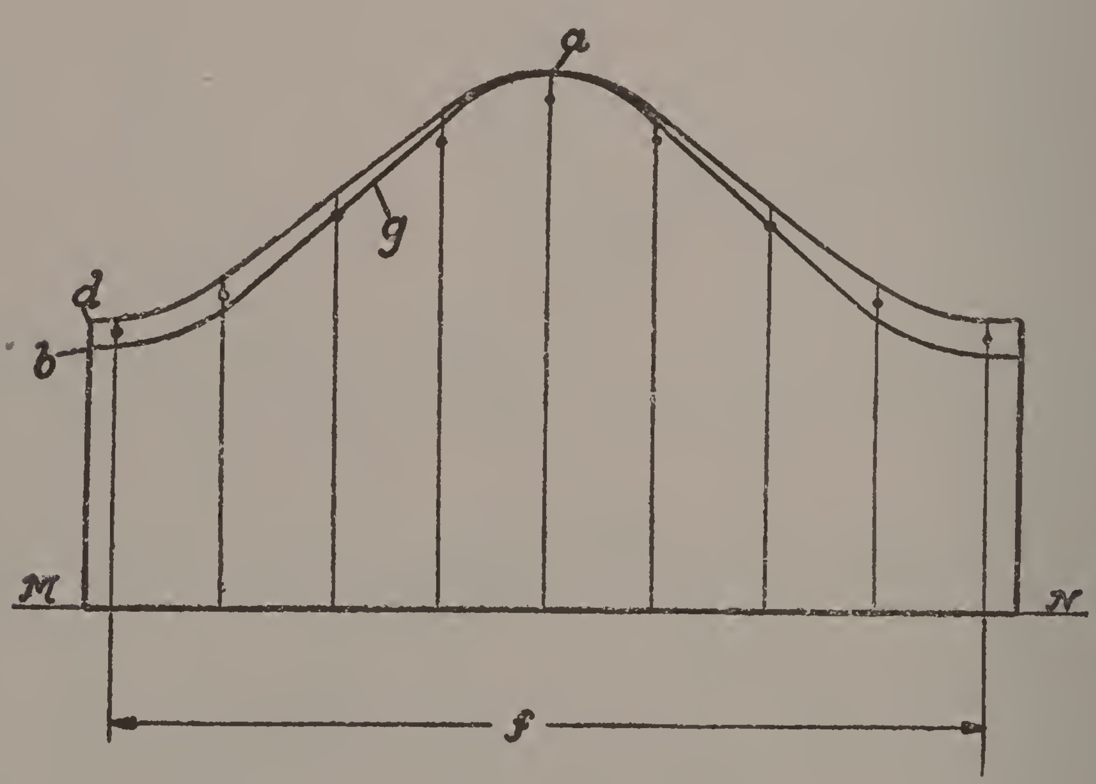

Fig. 23.

reduces to nothing at *b*. Now, refer to Fig. 23 and it will be noted that the opposite is used – that is to say, the distance *b* to *d* is the same as *b* to *d*, Fig. 21, and that the lap gradually reduces to nothing at *a*. The rivet holes can be placed in section *A*, but it is not advisable to put them in section *B*. Though they are shown in the pattern, Fig. 23, they are merely shown in about their approximate location, and only shown to give a good idea of the location of the rivet holes in relation to the miter line *g*. Laps on the sides as shown are then added and patterns are complete.

THE PATTERNS FOR A BIFURCATED PIPE, THE TWO ARMS BEING THE SAME DIAMETER AS THE MAIN PIPE, AND LEAVING IT AT THE SAME ANGLE.

23. In Fig. 24 is shown an elevation of a bifurcated pipe, all arms being of the same diameter. First, draw up the profile as in former problems, drawing and dividing the semi-circle as heretofore described. The pattern for section *A* is similar to laying out a dome, which is described

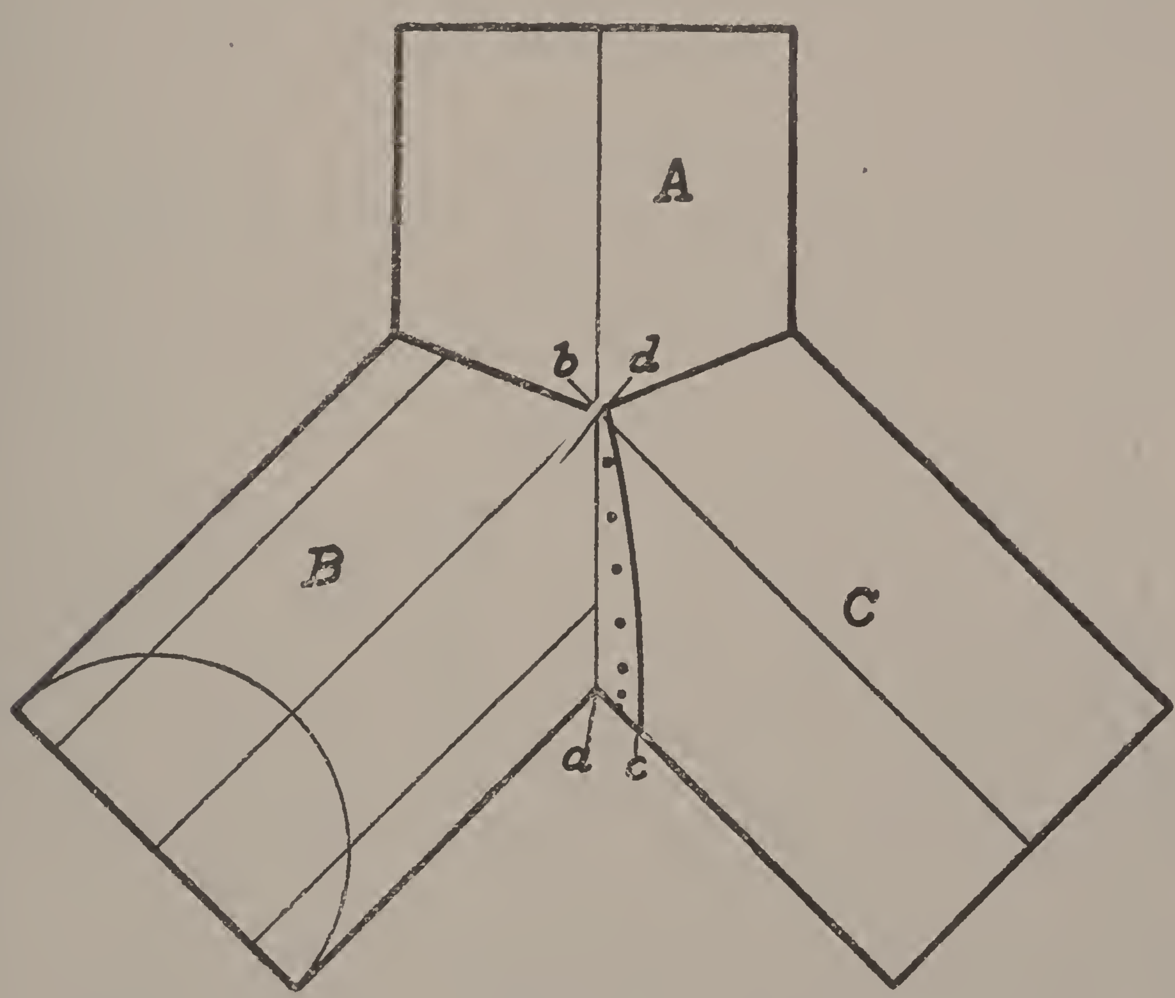

Fig. 24.

in Art. 13 to 16 inclusive. The patterns for sections *B* and *C* are similar to the other patterns that have been described, but the manner of connecting the sections together is important. While it may be possible to put a line of rivet holes on the miter line *a* to *b*, Fig. 24, the chances are in the majority of cases the rivets could not be driven, therefore, section

B is usually allowed a lap, extending over on section *C* as shown by the line *c* to *d*, and the rivet holes are placed as indicated.

24. The patterns, Figs. 25 and 26 are laid out in the usual way by first drawing the stretchout line *M N*, and laying off the circumferences,

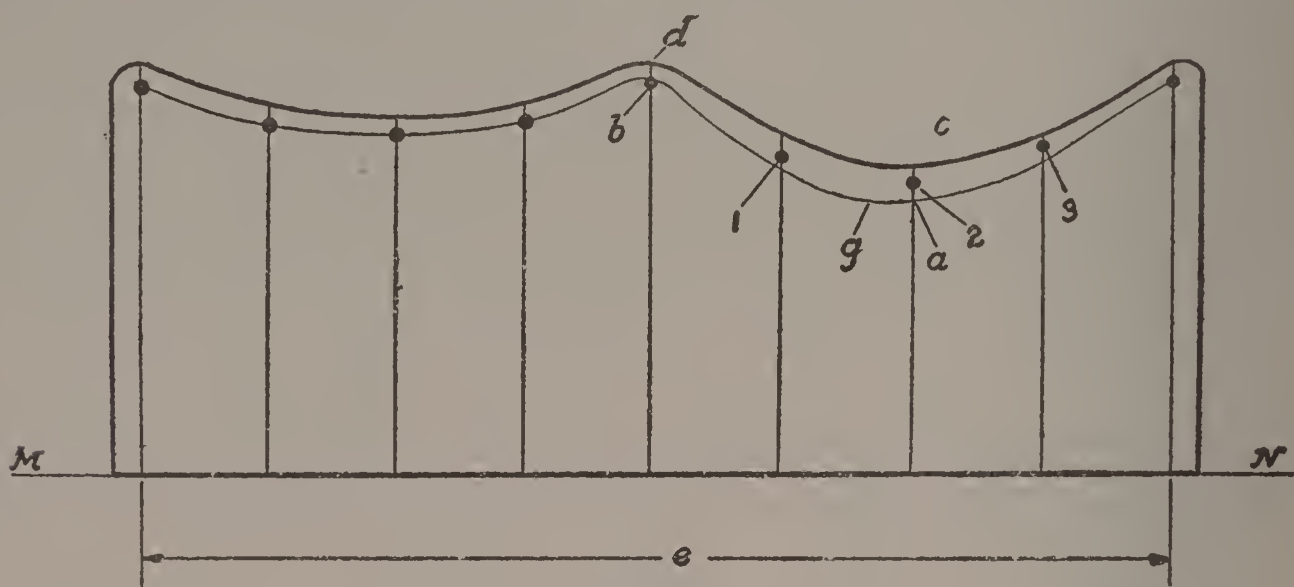

Fig. 25.

which are represented by the letters *e* and *f*. The holes, marked *1′*, *2′* and *3′*, Fig. 26, are to be marked from the holes of section *B*. While shown in the pattern, Fig. 26, they are merely so located so as to give an approximate idea of their location in regards to line *g*. All other holes, except

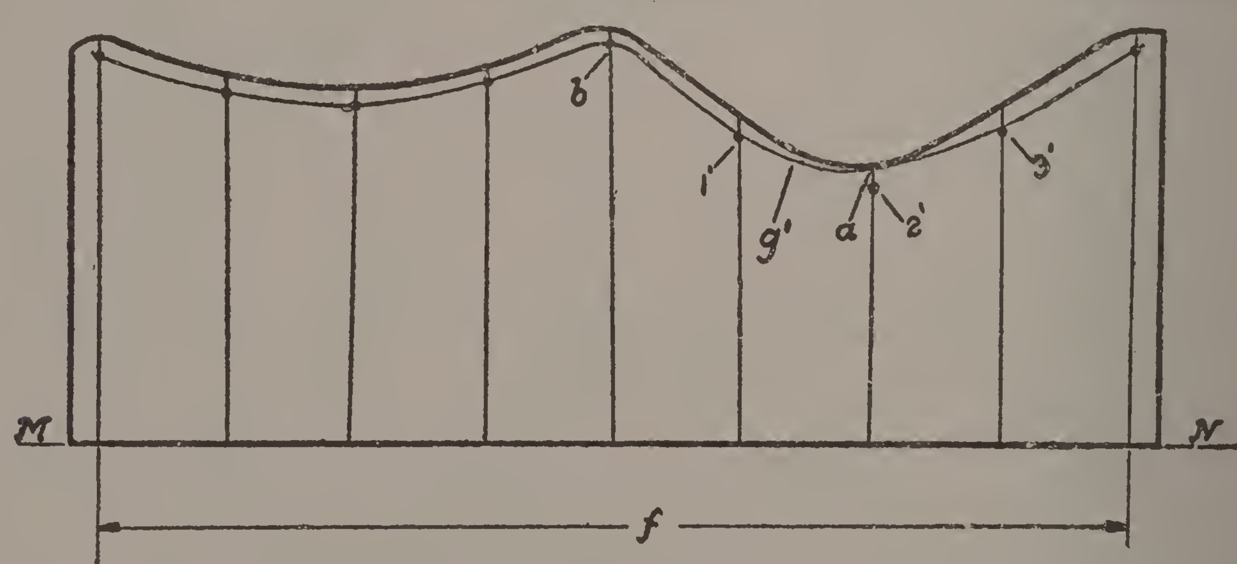

Fig. 26.

1, *2* and *3*, Fig. 25, and *1′*, *2′* and *3′*, Fig. 26, can be located as shown—that is, where the vertical lines intersect the respective lines *g* and *g*. Add laps, etc., and patterns are complete.

DEVELOPING IRREGULAR FORMS

PRINCIPLES OF TRIANGULATION.

INTRODUCTION.

25. The majority of irregular surfaces are developed by triangulation. tion Triangulation is also employed to develop some regular telescoping forms that can not be readily developed by the radial method. Developing by triangulation is not as difficult as it appears, for triangulation is none other than creating a series of triangles whereby to obtain the true lengths of all foreshortened lines. In Fig. 27 is shown a cylinder, and to develop the pattern it is only necessary to employ what is known as the parallel line method.

However, Fig. 27 affords an excellent opportunity to explain developing by triangulation. Ordinarily with the parallel line method the distance between the line *ab* and *cd*, and also the circumference, is all that is required in order to develop the pattern. With triangulation more lines will be required, therefore, in order to develop the surface of Fig. 27 by triangulation, step off on the quadrant a given number of equal spaces – any amount – and then erect the vertical solid lines as shown, also put in the dotted slanting lines. The latter (the dotted lines) are not the true lengths, and are called foreshortened lines.

26. In Fig. 27 all the solid lines appear to the eye the same length, while the dotted lines do not appear the same length. The latter is due to looking at a curved surface, the eye in a fixed position. The dotted lines encircle the cylinder like the thread of a screw, or spiral form. In Fig. 27 the true lengths of the solid lines can be taken directly from the elevation, and the true lengths of the dotted lines (in this case, all the dotted lines will be the same length) may be found by drawing, as shown in Fig. 28, the vertical line equal in length to the distance between the lines *ab* and *cd*. At the bottom of the vertical line and at right angles to it, draw a horizontal line of indefinite length and make the space *a′* equal to one of the equal spaces of the quadrant, and then draw the dotted line

as shown in Fig. 28, which is the true elevation of all the foreshortened dotted lines as shown in the side elevation.

To develop the pattern Fig. 29, by triangulation, draw the center solid line equal in length to any of the solid lines, side elevation, Fig. 27. Then set the dividers to one of the equal spaces of the quadrant, Fig. 27, and with

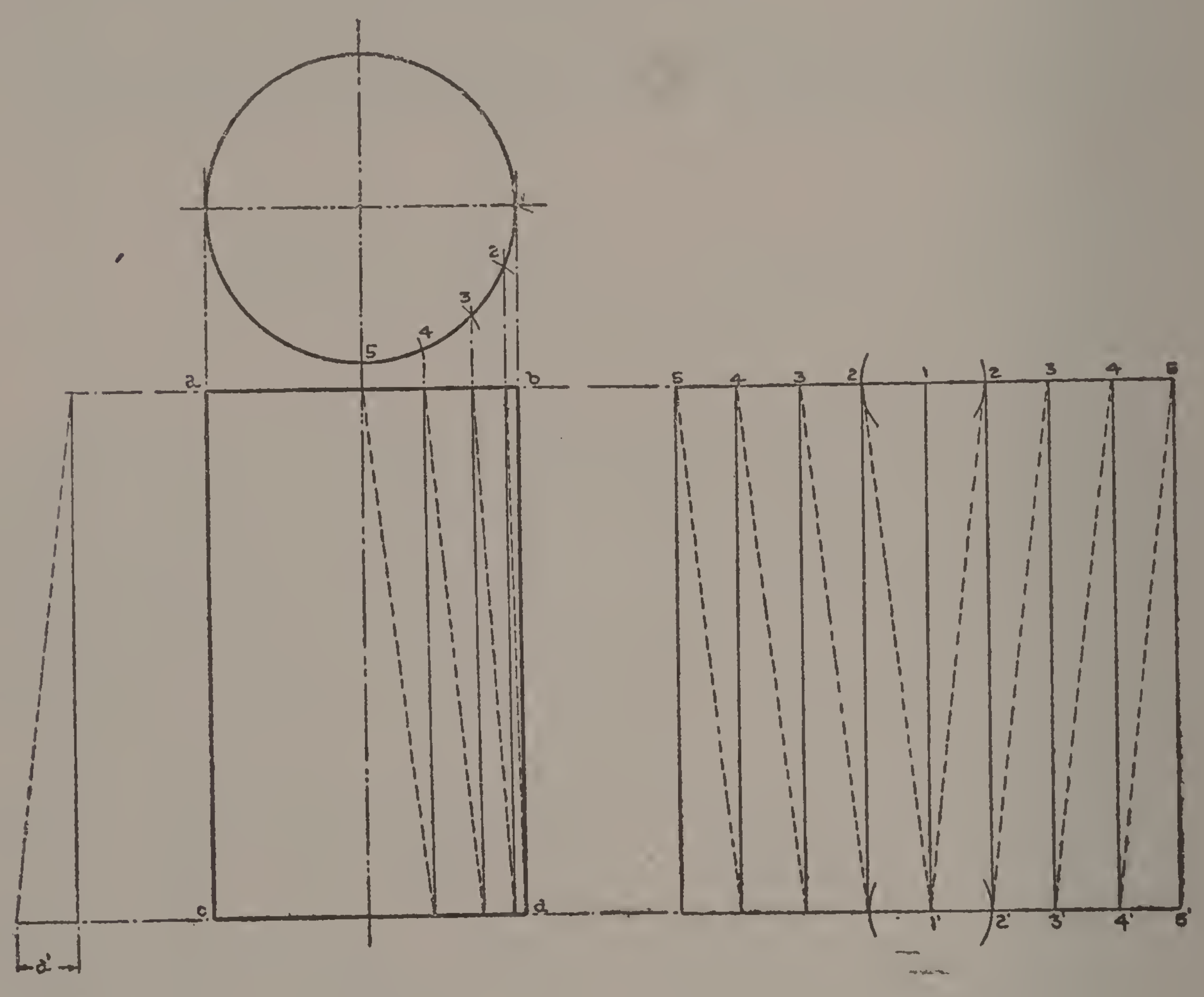

Fig. 28. Fig. 27 Fig. 29.

1, Fig. 27 as a center, draw arcs as shown. Then take the length of the dotted line, Fig. 28, and with *1'*, Fig. 29, as a center, draw arcs intersecting the arcs previously drawn, thereby creating point *2*. With *1'* as a center, arcs are drawn at the bottom as at the top, and with point *2*, Fig. 29, as a center, and trammels set equal to one of the solid lines, Fig. 27, draw arcs intersecting arcs previously drawn, thereby creating point *2'*. Continue in this manner until the entire pattern is developed.

The amount of equal spaces in the quadrant, Fig. 27, is optional, though it is advisable not to make the spaces too great. "Too great," in this respect, means the exercise of judgment, the closer the spaces are together, the more accurate the development, providing care has been

exercised. On some classes of work about a six inch space would be feasible, while on other classes of work about a two-inch space should be employed.

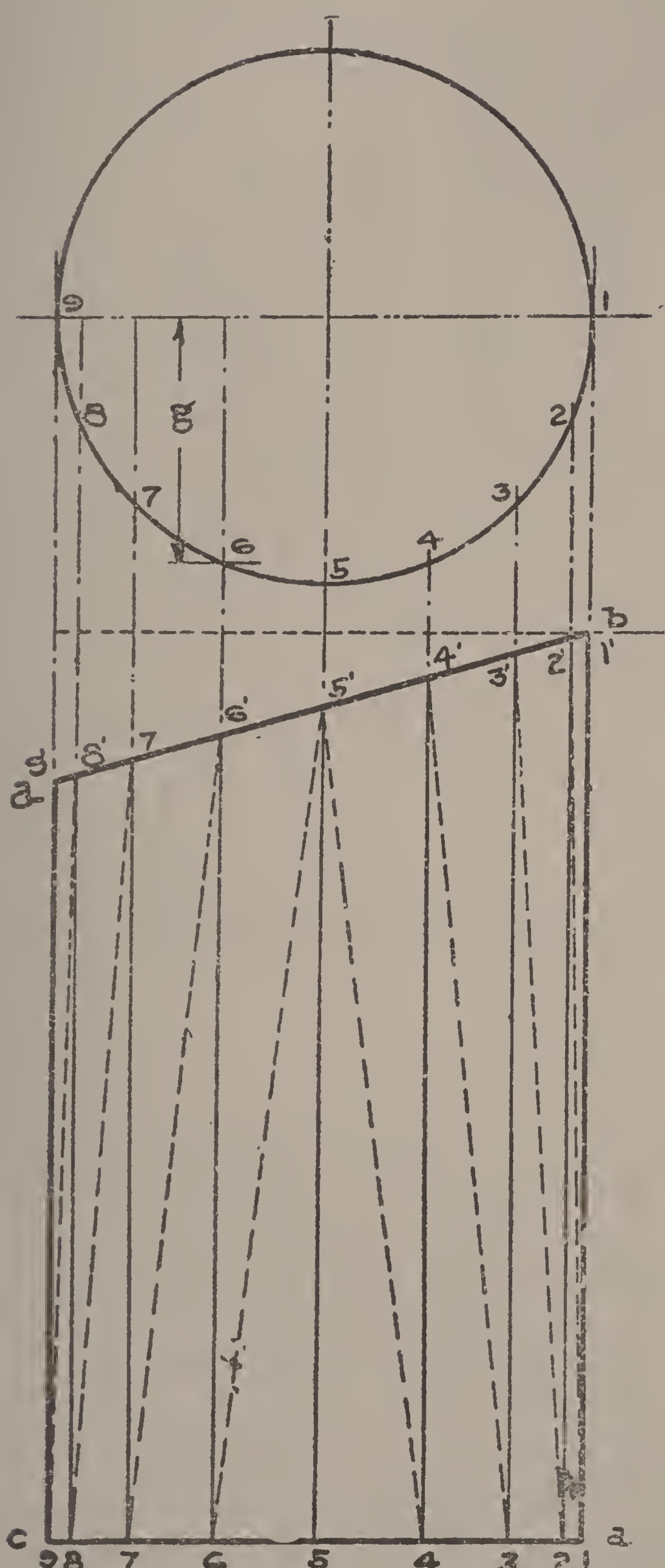

Fig. 30.

27. In Fig. 30 is shown a cylinder, the upper base represented by the line *ab*, which, as will be noted, is not in the horizontal plane. The pattern for Fig. 30, like Fig. 27, would be developed by parallel line method; the semi-circle being divided off into equal spaces as shown. To secure data for developing the pattern by triangulation draw the solid and dotted lines, Fig. 30, as described in connection with Fig. 27; the only difference being that the solid lines, Fig. 30, vary in length, though the true lengths in Fig. 30; as in Fig. 27, are shown in the side elevation. The true lengths of the dotted lines must be ascertained, and due to the position of the upper base, the altitudes for the dotted line will not be the same. The respective solid lines, Fig. 30, will, however, serve as the altitudes for the diagram of triangles Fig. 31, and the space *a'* Fig. 31, is equal to one of the equal spaces of the semi-circle, Fig. 30.

Since the upper base is not in the horizontal plane, it follows that the length of the line *ab*, from *1'* to *9'* is greater than the length of the line *cd* from *1* to *9*, therefore, the development as shown in Fig. 32 becomes a necessity in order to obtain proper spaces whereby to develop the pattern, Fig. 33.

To develop Fig. 32 draw the line *ab* from *1′* to *9′* equal in length to the line *ab* Fig. 30, from *1* to *9*, after which make the distance *c*, Fig. 32,

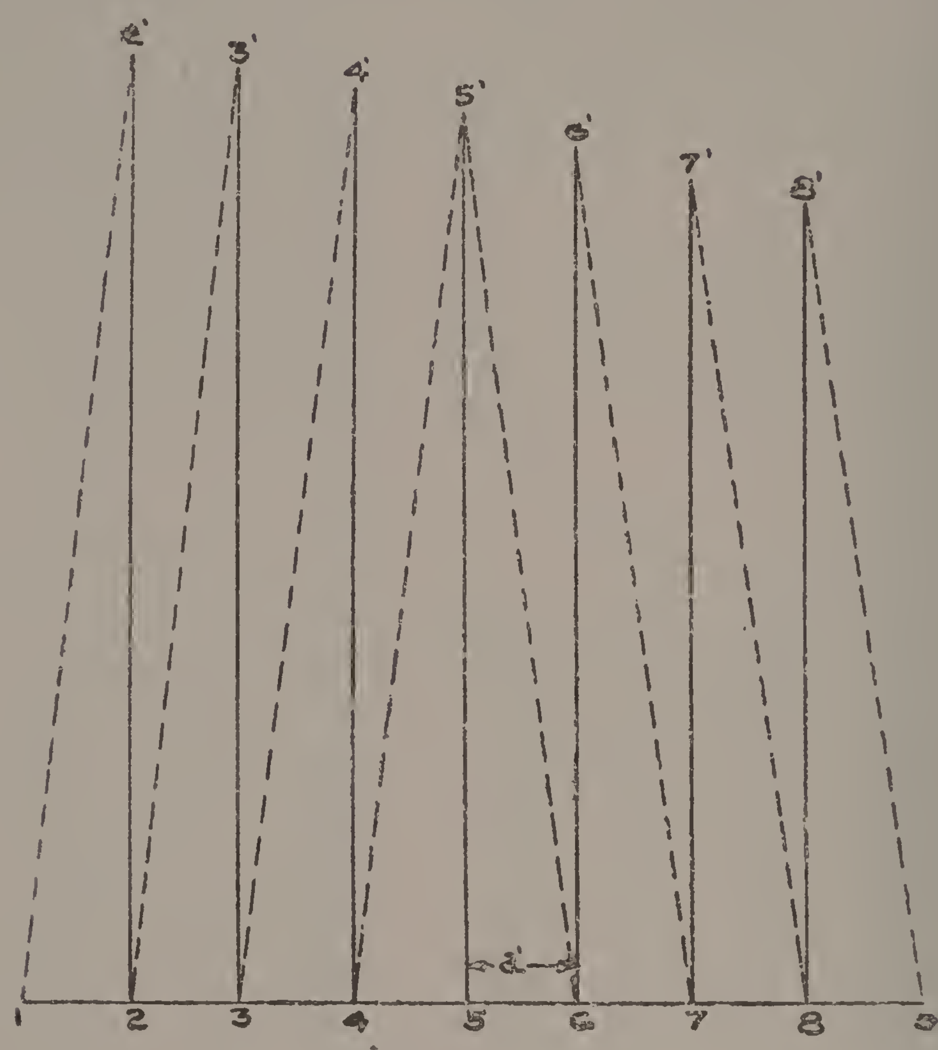

Fig. 31.

equal to the distance between 5′ and 6′, Fig. 30, the distance *d*, Fig. 32, equal to the distance between *6′* and 7′, Fig. 30; the distance *c*, Fig. 32, equal to the distance between 7′ and 8′, Fig. 30; and the distance *f*, Fig. 32, equal to the distance between *8′* and *9′*, Fig. 30. The vertical lines Fig. 32 are erected at right angles to the line *ab*, and the points *2′* to *8′* inclusive located by measuring off on the respective vertical lines between the horizontal centel line of the semi-circle, and points *2* to *8* inclusive; the distance *g*, Fig. 30, affords a clear explanation of the method of procedure. After the points *2′* to *8′* are located, draw the irregular curve.

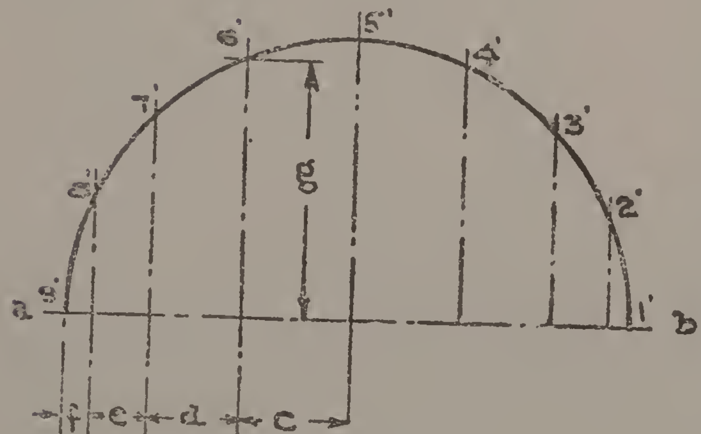

Fig. 32.

To develop the pattern, Fig. 33, erect the vertical solid lines from

5 to 5′, said line to be equal in length to the corresponding solid line,

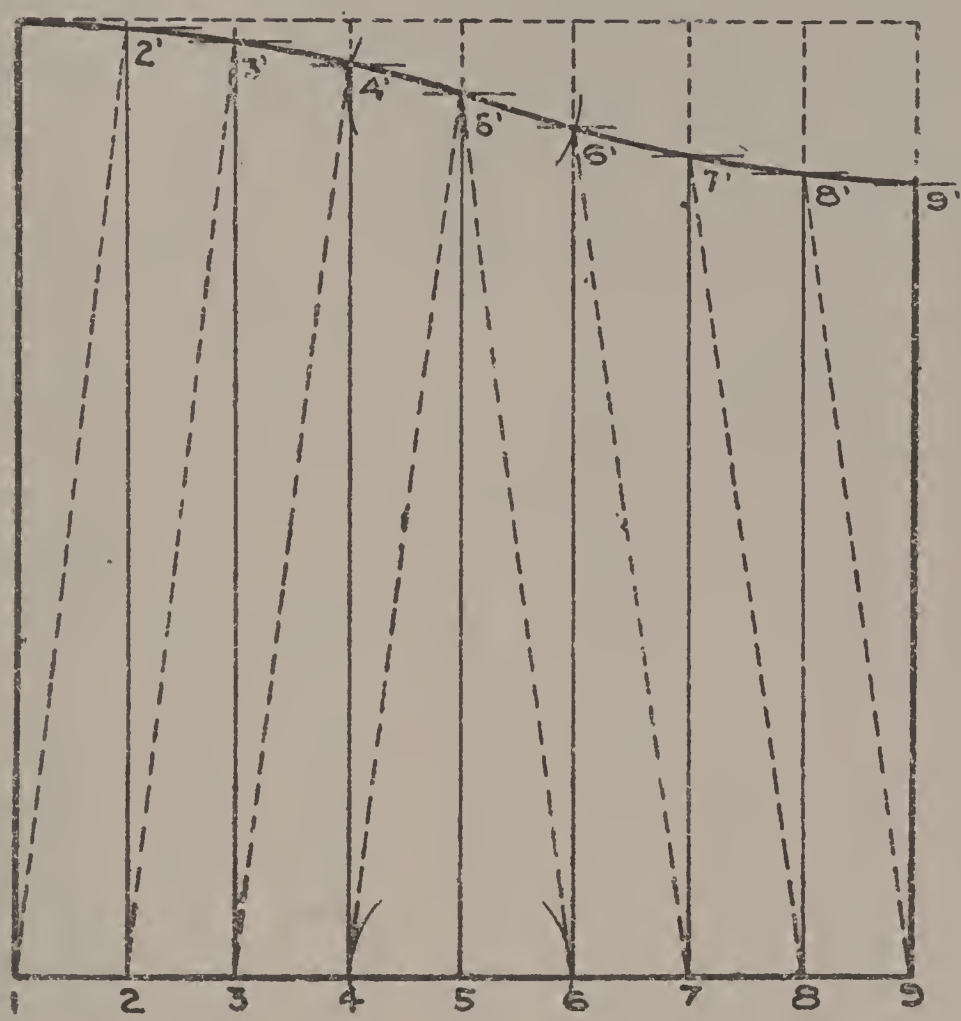

Fig. 34.

Fig. 30. Set the dividers equal to the space between 5 and 6, Fig. 30, and with 5, Fig. 33, as a center, draw arcs as shown. Then set trammels equal to the dotted line 5′ and 6′, Fig. 31, and with 5′, Fig. 33, as a center point, describe arcs intersecting arcs previously drawn thereby creating point 4. Now set dividers equal to the space 5′ to 6′, Fig. 32, and with 5′, Fig. 33, as a center, draw an arc. Next set trammels equal to the solid line from 6 to 6′, Fig. 30, and with 4, Fig. 33, as a center, draw an arc intersecting the arc previously drawn, thereby creating point 4′. A like process is continued until the entire pattern is developed; the space between 5 to 4, 4 to 3, etc., Fig. 33, to correspond to the space of the semi-circle, Fig. 30; the spaces between 5′ to 4′, 4′ to 3′, etc., Fig. 33, to correspond with the spaces Fig. 32.

It is self-evident that the length of the irregular line from 1′ to 9′, Fig. 33, is greater than the horizontal line from 1 to 9, therefore, the space bewteen 4′ to 5′ must necessarily be greater than the space between 4 to 5. Further, the spaces between 1′ to 2′, 2′ to 3′, etc., are all uniform, while the spaces between 1′ to 2′, 2′ to 3′, etc., are not uniform, though, in this case, the spaces between 1′ to 2′, and 8′ to 9′ are alike, or in other words,

on the irregular curve there are four irregular spaces on each side of the center line.

28. In Figs. 27 and 30 all the side lines in the side elevation were drawn in their true lengths but in the frustrum of the cone as shown in

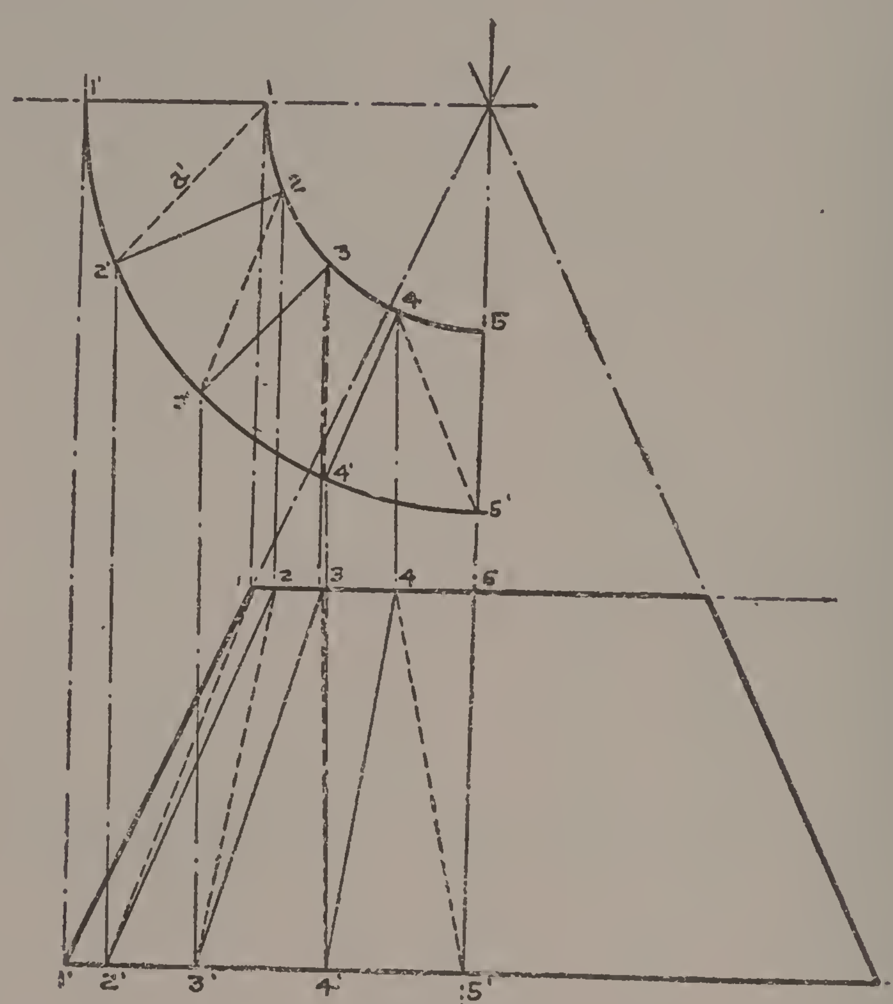

Fig. 34.

Fig. 33 some of the solid lines, like the dotted lines, are foreshortened lines, which is due to the form being telescoping; the only solid lines in Fig. 34 that are shown in their true lengths are the lines from *1* to *1'*.

To secure data for developing the pattern, Fig. 34, draw the two quadrants as shown; step off equal spaces – any amount – each quadrant to be divided into the same number of equal spaces. Draw in the dotted and solid lines numbering them from *1* to *5* inclusive and from *1'* to *5'* inclusive. Then locate the corresponding points on the upper base line and the lower base line, after which draw in the solid and dotted foreshortened lines as shown in the side elevation.

Since Fig. 34 is the frustrum of the cone, the pattern, in the majority of cases, could be more readily developed by the radical method, than by triangulation. However, in this instance, the object is to explain triangulation; the problem being an easy one and only requiring two triangles, or in reality, merely the finding of the true lengths of the dotted lines, which, in this case, are all the same length. The length of the

dotted lines need not be ascertained for it can be taken directly from the side elevation; the solid line from *1* to *1′* is the true length of all the solid lines.

To find the true length of the triangle as shown in Fig. 35, make the height of the altitude equal to the altitude of the frustrum, and at the foot of the altitude, Fig. 35, and at right angles to it, draw a horizontal line of indefinite length. Make the space *a*, Fig. 35, equal to the dotted line *a*, Fig. 34, and then draw the dotted slanting line or the hypotenuse as shown in Fig. 35, which is the true length of all the dotted lines shown foreshortened in the side elevation.

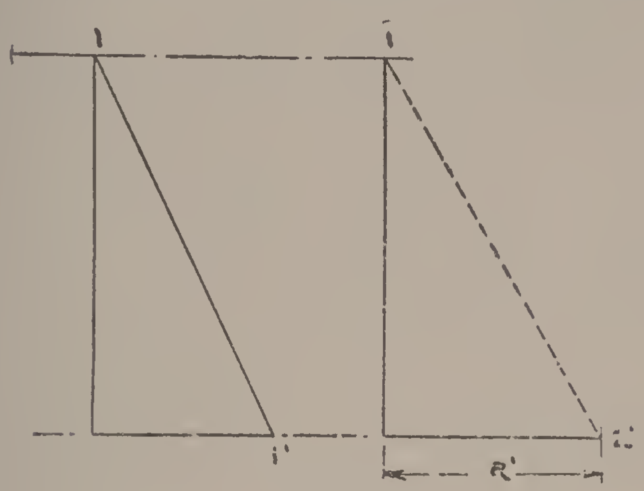

Fig. 35.

To develop the pattern, Fig. 36, draw the center line from *5* to *5′* equal in length to the solid line, Fig. 35, from *1′* to *1′*, or equal to the solid line, Fig. 34, *1′* to *1′*. Now set the dividers to one of the equal spaces of the small quadrant, Fig. 34, and with *5*, Fig. 36, as a center, draw an arc. Set the trammels equal to the dotted hyotenuse, Fig. 35, and with *5′*, Fig. 36, as a center, draw an arc intersecting the arc previously drawn,

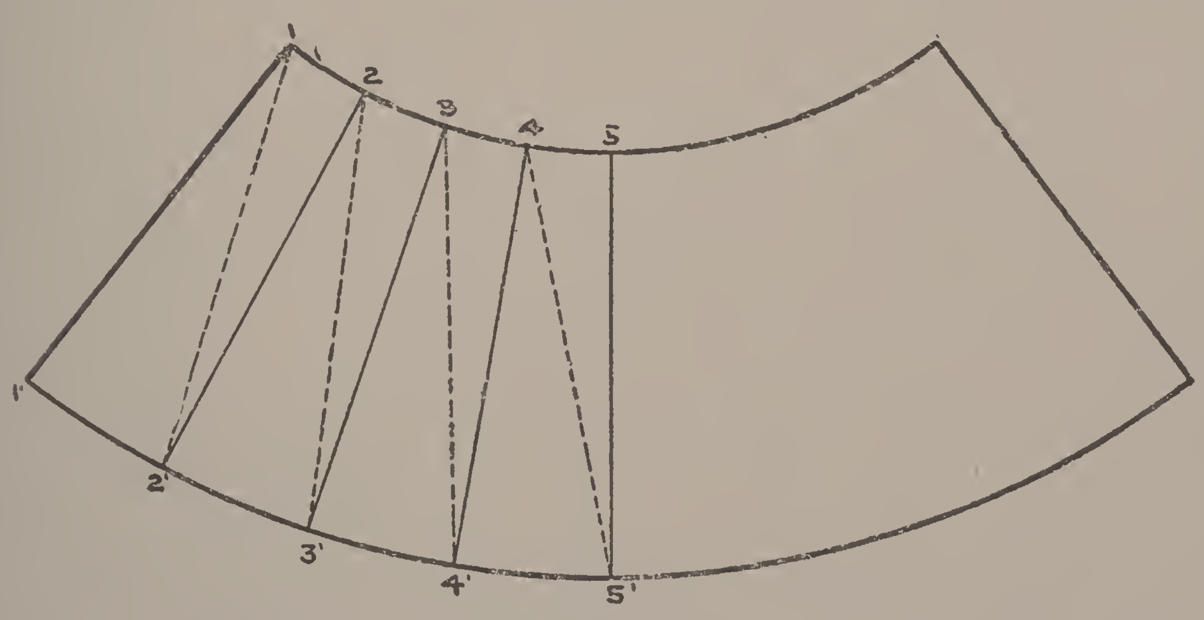

Fig. 36.

thereby creating point 4. Next set the trammels equal to the solid line *1* to *1′*, Fig. 35, and with *4*, Fig. 36, as a center draw an arc Next, set dividers to one of the equal spaces of the large quadrant, Fig. 34, and with *5′* Fig. 36, as a center, draw. an arc intersecting arc previously drawn, thereby creating point 4. The bal-

ance of the pattern can be developed in a like manner; the spaces at the top to correspond to the spaces of the small quadrant, Fig. 34, and the spaces at the bottom to correspond to the large spaces, Fig. 34; the dotted and solid lines, Fig. 36, to correspond to the dotted solid lines of the diagram of the triangles, Fig. 35. After the pattern has been developed to *1*, and *1'* draw in connecting lines, etc., and the pattern is complete.

29. The frustrum of a cone, Fig. 37, is similar to Fig. 34, except that

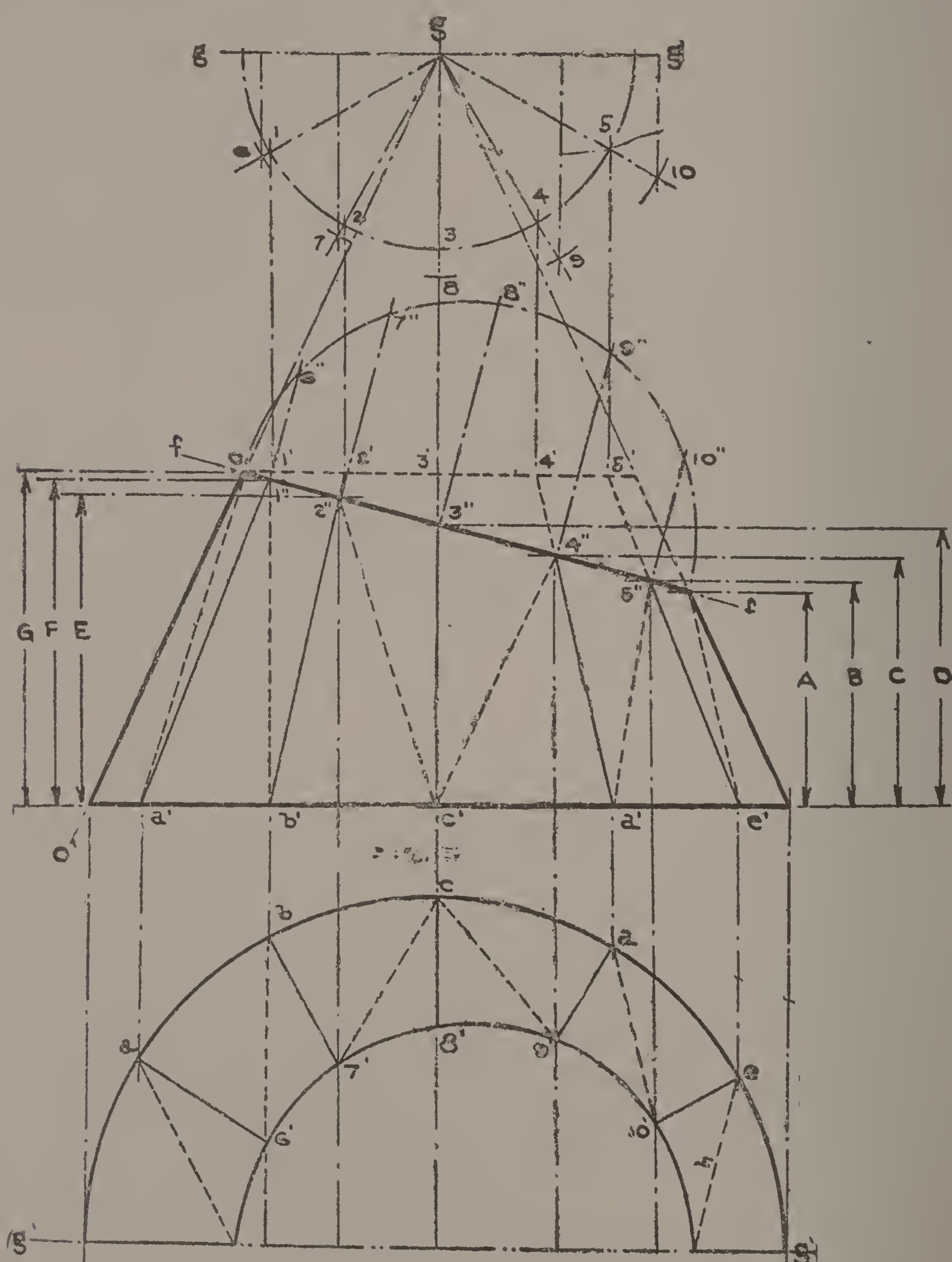

Fig. 37.

the upper base is not in the horizontal plane. This problem affords a further opportunity to demonstrate developing by triangulation. To secure data for developing the surface, Fig. 37, draw the upper semi-

circle, Fig. 37, and divide it off into any number of equal spaces; in this case the points located are numbered from *1* to *5* inclusive. Also, draw the semi-circle, Fig. 37, and divide it off into the same number of equal spaces as the semi-circle, Fig. 37; the points located are lettered *a* to *e* inclusive.

From *1* to *5* inclusive, upper plan, extend vertical lines to the dotted horizontal lines, Fig. 37, thus locating points *1′* to *5′* inclusive; also extend from *a* to *e*, lower plan, vertical lines to the lower base of Fig. 37, thereby creating points *a′* to *e′* etc., on the solid lines as shown in Fig. 37; the solid lines not to extend above the slant line, or points *1″* to *5″* inclusive. Then draw the dotted lines as shown. The foregoing describes how points *1″* to *5″*, Fig. 37, are located on the slant line *ff*.

The data for developing the irregular curve, lower plan, is procured from Fig. 37. From points *1′* to *5′* inclusive, Fig. 37, project horizontl lines through points *1″* to *5″* inclusive, Fig. 37, from the outer line to the center line *3′* to *c′*, and using *g*, upper plan, as a center, draw arcs, said arcs to intersect the radical lines extending from the apex *g*, upper plan, thereby locating points *6*, *7*, *8*, *9*, and *10*; the vertical height between the horizontal line *gg* and point *6*, upper plan, being equal to the distance between the horizontal line *g′ g′* and point *6′*, Fig. 37. Points *7′* *8′*, *9′*, and *10′*, lower plan, are located in a like manner, after which the solid lines and dotted lines are drawn as shown.

To develop the triangles, Figs. 38 and 39, make the altitudes *A* to *D* inclusive equal to the respective distances as shown in Fig. 37. As will be seen each dotted line has a different altitude; the same altitudes in

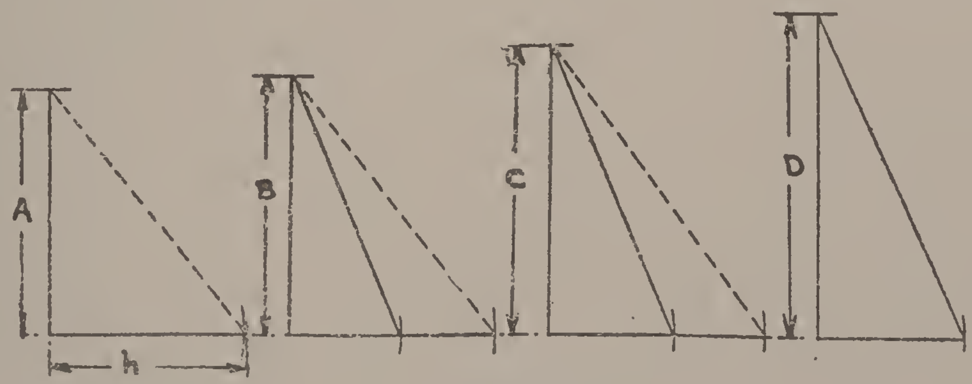

Fig. 38.

some cases being the same for both the dotted and solid lines, though the hypotenuse of the triangles, Figs. 38 to 39 is not the same. The bases of the triangles which are taken from Fig. 37, make a difference in the lengths of the dotted and solid lines. The length of the dotted line, Fig. 37, from *5″* to *c′* is found by drawing the altitude *A*, Fig. 38, equal to the altitude *A*, Fig. 37, and making the base *h*, of the triangle, Fig. 39, equal to the dotted line *h*, Fig. 37, lower plan. The base of the balance of the triangles Figs. 38 and 39 are constructed in a like manner by taking

the respective lengths of the dotted and solid lines from Fig. 37, lower plan.

The foreshortened dotted and solid lines in both the side elevation, and the lower plan, Fig. 37, are shown so as to trace clearly the method of procedure; the dotted and solid lines, Fig. 37, side elevation, indicating the points from which the altitudes are secured. The dotted and solid lines, lower plan, are none other than the base of the triangles; the two foregoing when properly brought together afford an opportunity to ascertain the hypotenuse of the triangle, which is the true length of the foreshortened lines. Before the pattern, Fig. 40, can be developed a development of the upper base must be made, therefore, lines at right angles to the slant line, *ff*, are drawn and the distances from the line *ff* to points *6″* to *10″* inclusive are located; said lengths of lines to correspond to corresponding distances, Fig. 37, lower plan.

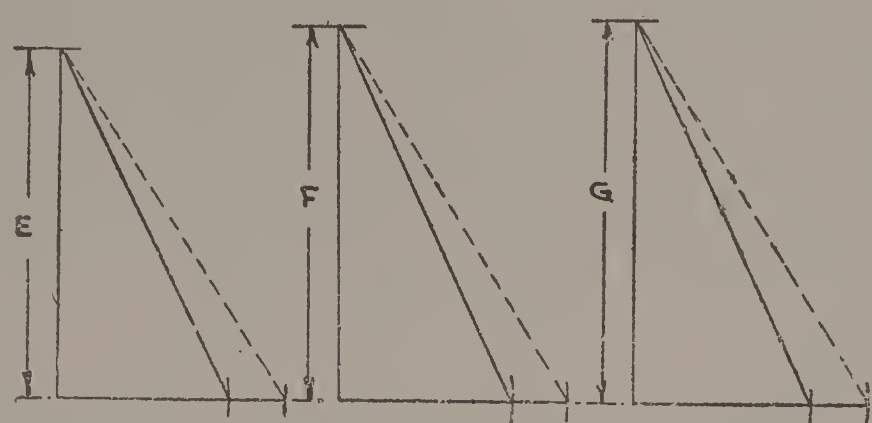

Fig. 39.

To develop the pattern, Fig. 40, draw the solid line from *o* to *o′* equal in length to the solid line *o* to *o′*, Fig. 37. Then set trammels equal to the dotted line, Fig. 39, altitude *G*, and using *o*, Fig. 40, as a center point, draw an arc. Set dividers equal to one of the equal spaces of the large semi-circle, Fig. 37, and with *o′*, Fig. 40, as a center draw an arc intersecting the arc previously drawn, thereby creating point *a*. With *a*,

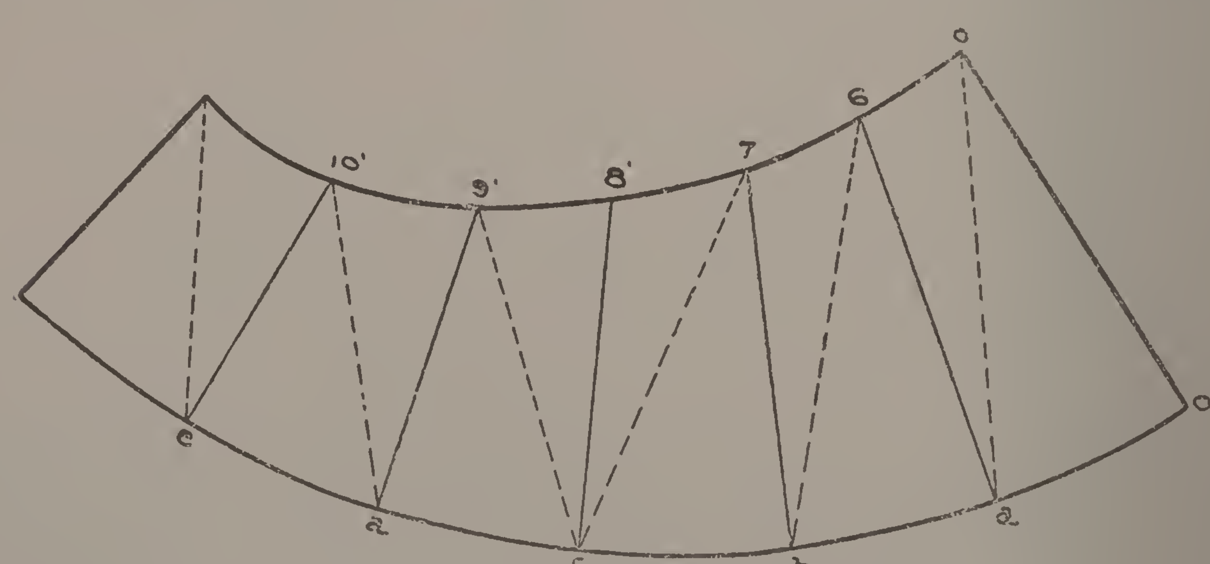

Fig. 40.

Fig. 40, as a center and with the trammels set equal to the solid line, Fig. 38, altitude *G*, draw an arc. Then set dividers equal to the space

o to *6″*, Fig. 37, and with *o*, Fig. 40, as a center, draw an arc, intersecting the arc previously drawn, thereby creating point *6′*.

The balance of the pattern is developed in like manner; the length of the respective dotted and solid lines being taken from Figs. 38 to 39; the spaces from *a* to *b*, *b* to *c*, etc., Fig. 40, to be taken from Fig. 37, lower plan; and the spaces *6′* to *7′*, *7′* to *8′*, etc., to be taken from the spaces *6″* to *7″*, *7″* to *8″*, etc., Fig. 37, side elevation. After all the points are located draw in the connecting lines thereby delevoping the half pattern as shown.

TO DEVELOP THE PATTERNS FOR A TRANSITION PIECE BETWEEN A RECTANGULAR OPENING AND A ROUND PIPE.

30. The illustration in Fig. 41 represents a fitting or hood used by sheet metal workers. The bases for fans, ventilator stacks and smoke hoods are made in this form. Examination of the side elevation shows that the lower base is in part parallel with the upper base; the balance of the lower base being obliquely inclined.

Considering the foregoing, it will be seen that Fig. 41 really represents on one side of the central vertical construction line one-half of the side elevation of a transition piece where the upper and lower bases are both in the same plane, such as would be the case if the transition piece was to be attached to a flat roof, while in the other half of the side elevation the upper and lower base are not in the same plane, such as would be the case if the transition piece was attached to a slant roof.

The principles of securing the data and developing the patterns are, however, the same, and accordingly Fig. 41 is assumed to be a transition so located on the roof that part of the lower base is attached to a flat roof, and the balance to a slant roof. The plan and elevation are first drawn as shown by the full lines, after which the semi-circle in the plan view is divideded into any number of equal spaces – in this case there are six spaces. The points are numbered from 1 to 7 inclusive. From these points lines are extended to the points 8 and 9, which lines will later be used for the base of the triangles.

If both the upper and lower base were in the same plane, then only one altitude would be necessary, the altitude *a*, but due to the obliquely inclined base the second altitude is necessary, the altitude *b*. In the side elevation are shown a number of lines which have no bearing on the problem except to show how the dotted lines, shown in the plan view, appear in the side elevation. Examination will show that the lines are projected from the points in the plan view to the upper base line. From the newly found points on said lines the dotted lines of the side elevation, which are foreshortened lines, are drawn

to points 8′ and 9′. If the transition piece was to be attached to a curved surface, then more than two altitudes would be required and the foreshortened lines, as shown in the side elevation, would be necessary in order to locate the points whereby to determine the altitudes.

The diagram of triangles, Fig. 42, are found in the usual way, making the altitudes *a* and *b* equal to the corresponding heights of

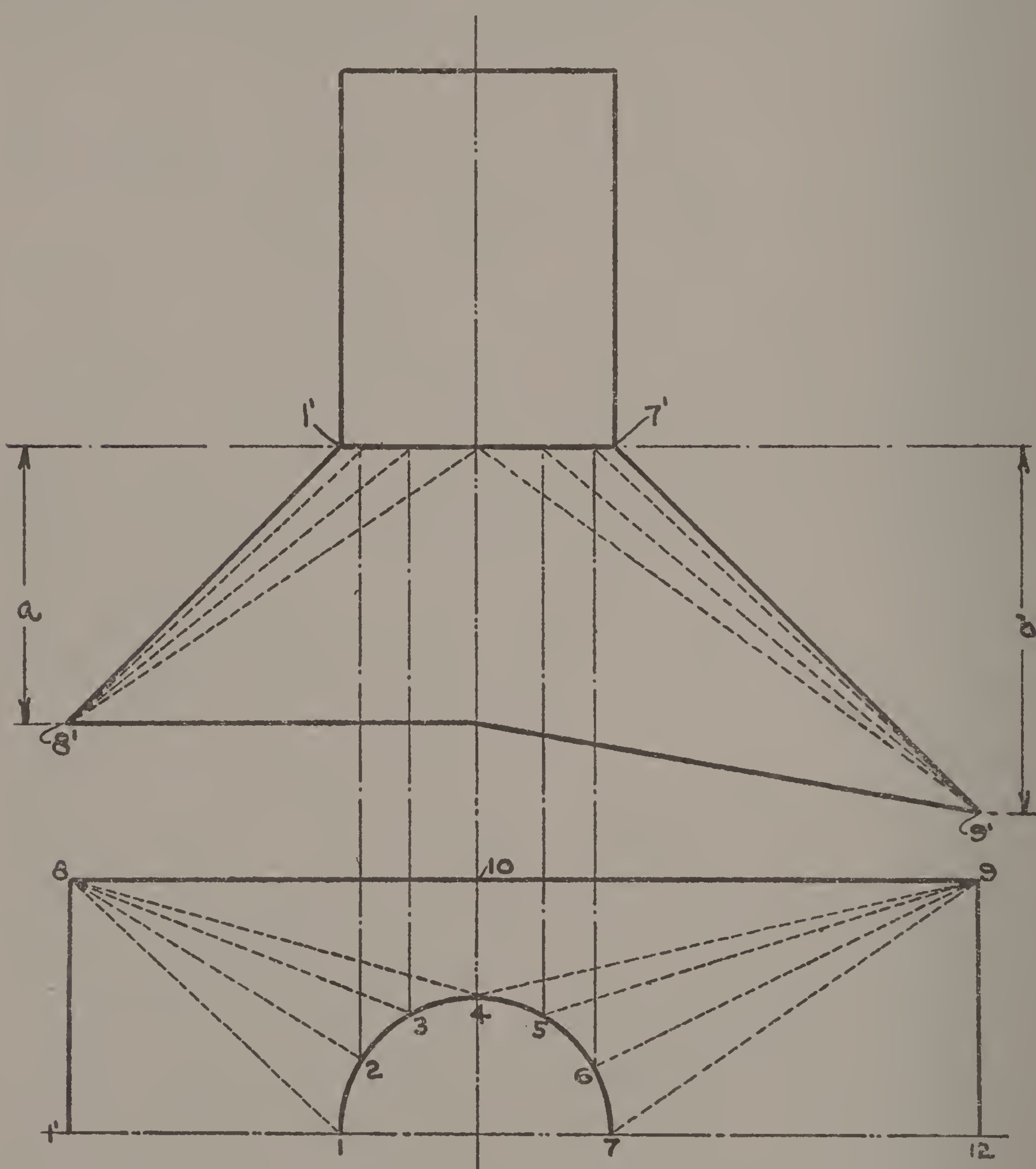

Fig. 41

Fig. 41. On the base of the triangles, Fig. 42, space off the distances from 1 to 8, 2 to 8, 3 to 8, 4 to 8, 4 to 10, 4 to 9, 5 to 9, 6 to 9 and 7 to 9 of the plan view of Fig. 41, the distances being located on the base line, then drawing the connected lines to the top of the triangle, as shown in Fig. 42. The length of the solid lines, numbered 11 and 12 in Fig. 42, are merely shown for clearness sake, and need not be

ascertained, as they represent the solid lines of the side elevation from 1′ to 8′ and 7′ to 9′. These measurements can be taken from the side elevation. The dotted line, numbered 10 in Fig. 42, is the length of the foreshortened line from 4 to 10, Fig. 41.

To develop the pattern, Fig. 43, make the line from 4 to 10 equal

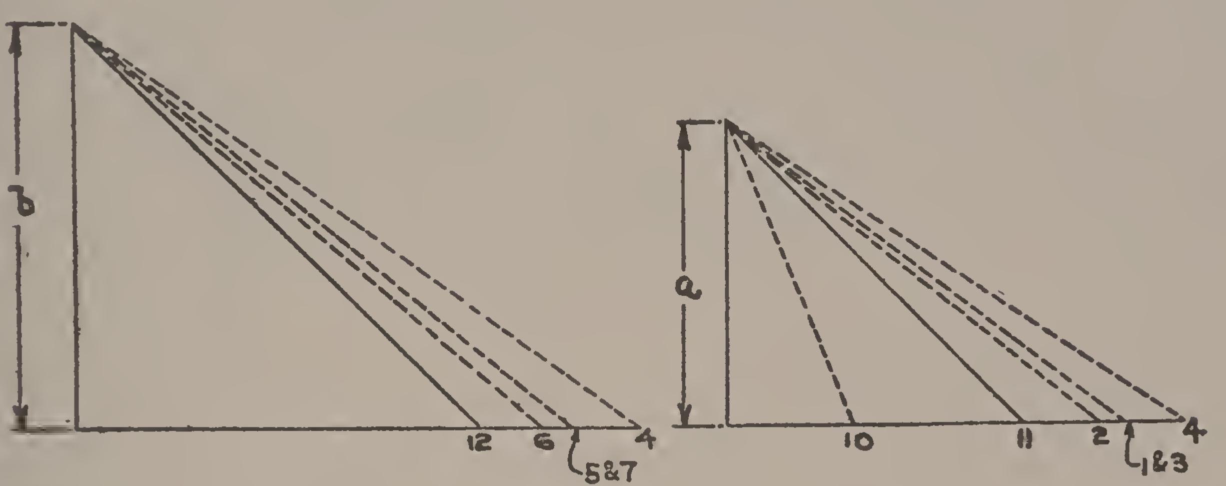

Fig. 42

to the slant solid line No. 10 of the altitude *a*, Fig. 42. Then set dividers equal to the space from 1 to 2, Fig. 41, and using point 4, Fig. 43, as a center point draw arcs on each side. The pattern for one side only need be described, for the same movements are used for one side as used for the other, but care should be taken at all times to use the proper lines.

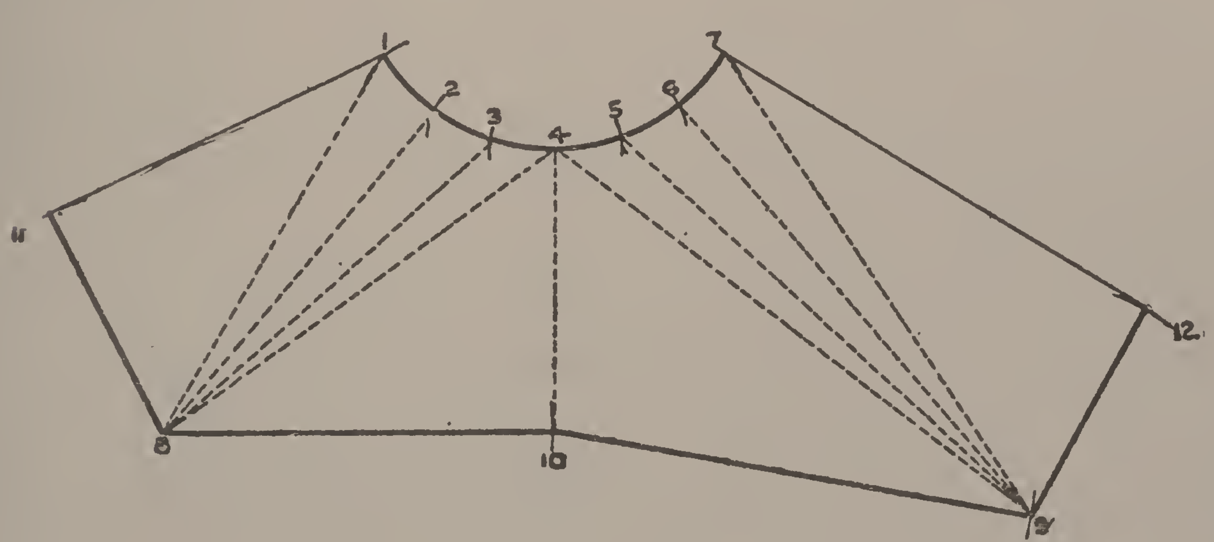

Fig. 43

Having located points 4 and 10, Fig. 43, take the length of the line from 10 to 8 of the plan view of Fig. 41, and using point 10 of Fig. 43 as a center point draw an arc. Then with point 4 as a center point – trammels set equal to the distance of the dotted slant line 4 of the triangle, altitude *a*, draw an arc intersecting the arc previously drawn and creating point 8.

The trammels are then set equal in length to the dotted slant line 3 of the triangle, altitude *a*, and using point 8, Fig. 43, as a center point an arc is drawn intersecting the small arc previously drawn at the top, thereby creating point 3. Then the length of the dotted slant line 2 of the triangle, altitude *a*, is taken, and using point 8, Fig. 43, as a center, an arc is drawn. The dividers being set equal to the space from 1 to 2 of the plan view, Fig. 41. The point 3, Fig. 43, is used as a center point and an arc is drawn intersecting the arc previously drawn, thereby creating point 2. The trammels are then set equal to the distance of the slant dotted line 1 of the triangle, altitude *a*, and using 8, Fig. 43, as a center point, an arc is drawn. Then with set dividers and with point 2 as a center point, a small arc is drawn to

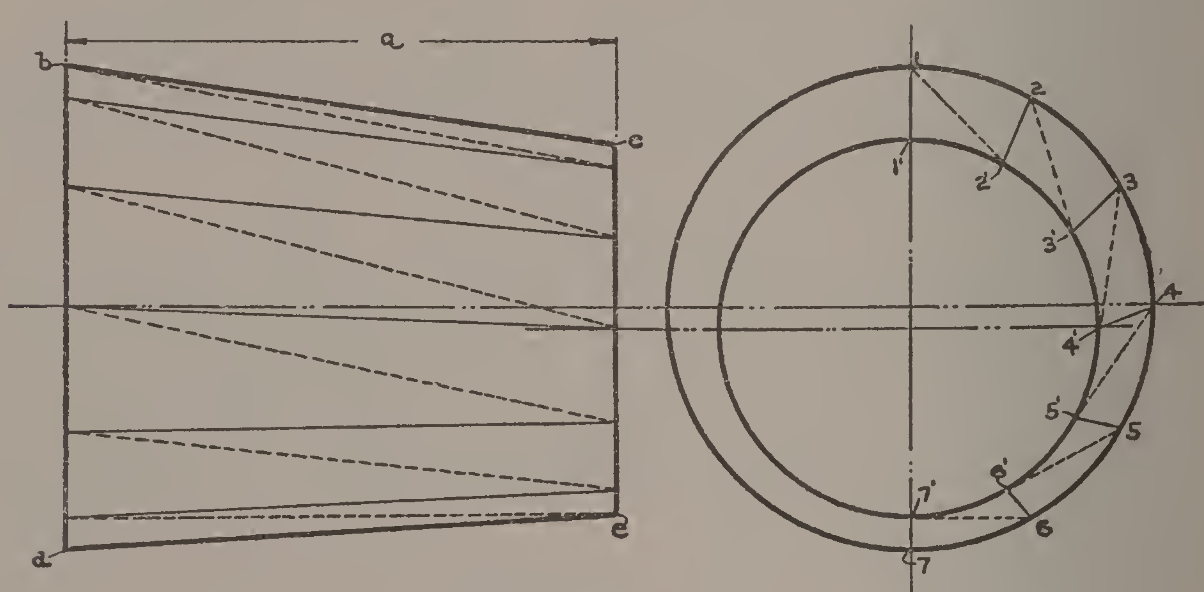

Fig. 44

intersect the arc previously drawn, thereby creating point 1. Next, the distance from 8 to 11 of the plan view of Fig. 41 is taken, and using point 8, Fig. 43, as a center, draw an arc.

Following this operation, the trammels are set equal to the length of the solid line 1′ to 8′ of the side elevation, and using point 1, Fig. 43, as a center point, draw an arc intersecting the arc previously drawn, thereby creating the point 11. The other part of the pattern is developed in a like manner, except the length of the lines are taken from the triangle, altitude *b*. Allow for laps and the half pattern is complete.

TO DEVELOP THE PATTERN FOR A TAPER COURSE OR SLOPE COURSE.

31. A transition piece, called a taper course or slope course, is shown in the illustration, Fig. 44. The majority of locomotive boilers are nowadays constructed with a tape course of eccentric shape. To develop the pattern the end and elevation are first drawn up as shown

by the heavy lines, and then the semi-circles of the end view are divided into any number of equal spaces – in this case six spaces – numbered from 1 to 7 inclusive and 1′ to 7′ inclusive.

After the several points are located then the dotted and solid connecting lines in the end view are drawn. The same lines are also shown in the side elevation in their foreshortened length and correct position on the taper course, but their presence there is not of necessity to secure the data for laying out the pattern. They are merely shown to set forth the underlying principles of triangulation. The mean measurement of the side elevation noted in this problem is the distance *a*, which should be the over-all distance from flange line to flange line; also, the distances *b* to *c*, and *d* to *e*.

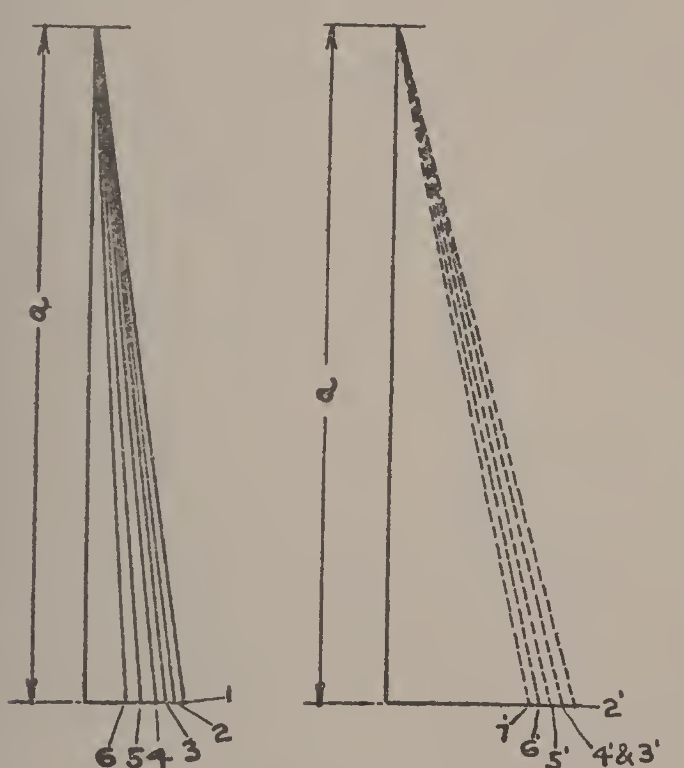

Fig. 45

The next in order is to find the true lengths of the foreshortened lines of the side elevation, which is accomplished by the diagram of triangles as shown in Fig. 45. The altitude *a* is to be the same as the distance *a*, Fig. 44. Two diagrams of triangles are shown, both with the same altitude, and this is done merely for clearness sake. As will be noted in the diagrams of triangles, Fig. 45, the dotted lines and solid lines are separated. The length of the respective lines are often nearly the same, and which, when working to a scale, make them appear about the same length; hence, arranging the triangles in the manner indicated.

To secure the true lengths of the foreshortened lines of the side elevation take the length of the dotted lines from 1 to 2′, 2 to 3′, 3 to 4′, 4 to 5′, 5 to 6′, and 6 to 7′, and the length of the solid lines from 2 to 2′, 3 to 3′, 4 to 4′, 5 to 5′, and 6 to 6′, and space them off on the base of the respective triangles in Fig. 45, and then draw the slant dotted and solid lines to the top as shown. The solid line 1 in the triangle, Fig. 45, need not be found, as it can be taken from the side elevation from the points *c* to *b*. It is, however, shown to show how the foreshortened line from 1 to 1′, end view, Fig. 44, is found. The same method also applies to the foreshortened line from 7 to 7′; its true length is the line *d* to *e* in the side elevation.

To develop the pattern, Fig. 46, make the center line from 1 to 1′

equal to the length of the line in the side elevation from b to c. Then take two pairs of dividers, setting one qual to the space 1 to 2 of the end view, and the other to the space 1′ to 2′ of the end view. From here on with this problem they will be referred to as the "small space" for the former and the "large space" for the latter. The development is as follows:

With point 1 as a center, Fig. 46, and trammels set equal to the length of the dotted line 2′, Fig. 45, draw an arc. Then, with dividers length to the solid line 4 of the triangles, Fig. 45, draw an arc, and then with point 3, Fig. 46, as a center, dividers set to large space, draw an arc intersecting the arc previously drawn, thereby creating point 2′. With 2′ as a center point and trammels set equal to the solid line of the diagram of triangles, draw an arc and then with point 1 as a center point and dividers set equal to the large space, draw an arc intersecting arc previously drawn, thereby creating point 2.

Using point 2 as a center and trammels set equal in length to the dotted line 3′ of Fig. 45, draw an arc and then with point 2′ as a center divider, set the small space, draw an arc intersecting the arc previously drawn, thereby creating point 3′. With point 3′ as a center point, trammels set equal in length to the solid line of 3 of Fig. 45, draw an arc and then with point 2, Fig. 46, as a center point, dividers set to the large space, draw an arc intersecting arc previously drawn, thereby creating point 3.

Using point 3 as a center, trammels set equal in length to the dotted line 4′, Fig. 45, draw an arc and then with point 3′, Fig. 46 as a center, draw an arc intersecting the arc previously drawn, thereby creating point 4′. Using 4′ as a center point, trammels set equal in set the small space and with point 1′, Fig. 46, as a center point, draw an arc intersecting the arc previously drawn, thereby creating point 4. The other points, 5, 6, 7, 5′, 6′ and 7′, are found in a like manner by taking the lengths of the line from the diagram of triangles, Fig. 45, and stepping off the small and large spaces as described. Add for flange, etc., and pattern is complete.

TO DEVELOP THE PATTERN FOR A FOUR-WAY BRANCH Y.

32. In sheet metal work there are many cases of branch pipe work where it is desired to take from the main pipe, called by many a LEADER, a number of branches. The manner of designing a fitting would, perhaps, by different parties be designed differently, there being so many varying conditions which must be taken into consideration. However, the first consideration should be to make the design such that an easy flow for the contents of the pipe will be secured. The angles, bends, etc., should be such that the work can be put together readily.

In the illustration, Fig. 47, is shown a four-way branch pipe. The

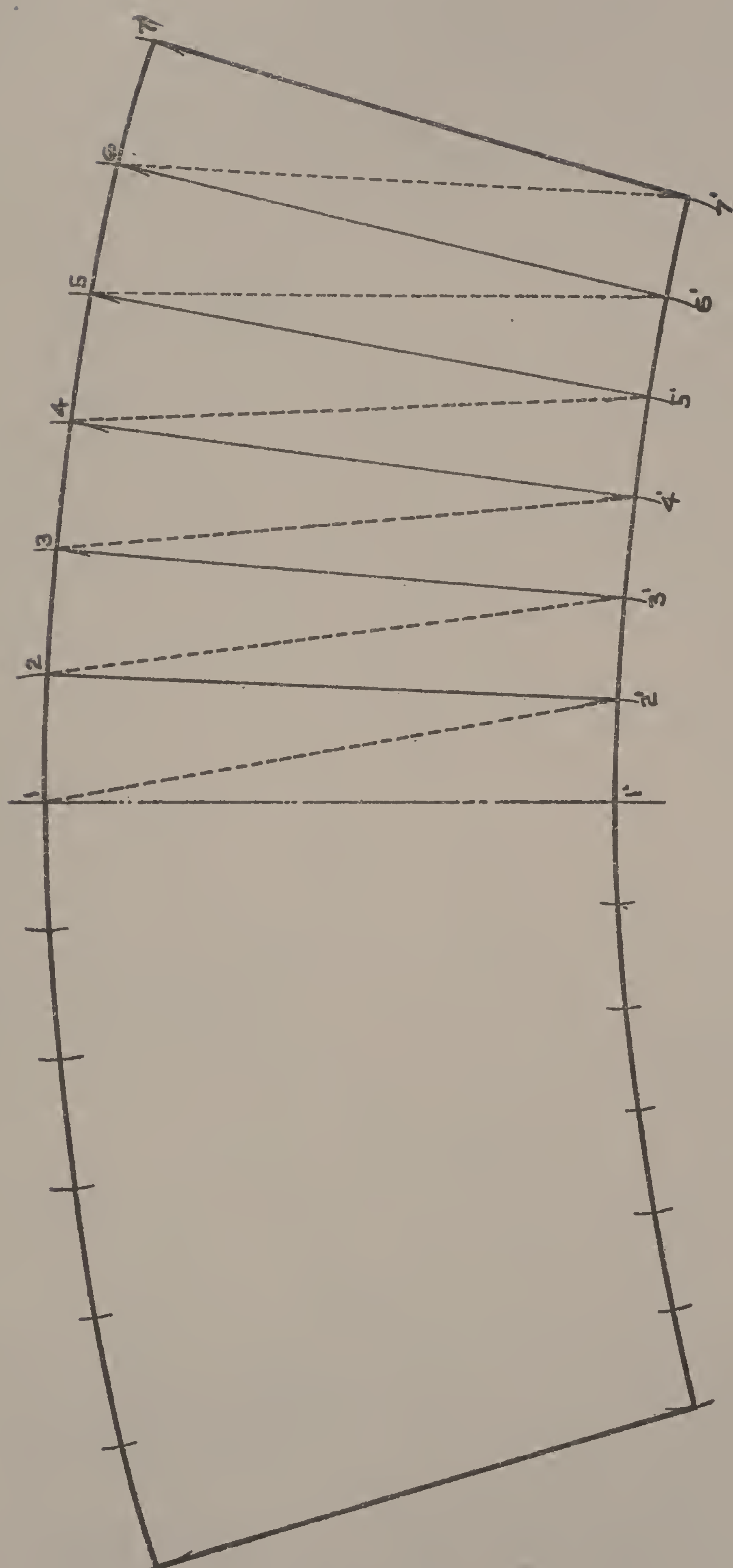

Fig. 46

problem is chiefly introduced to show fully the principles of triangulation, showing the use of certain principles heretofore mentioned. The first consideration is to decide upon the diameter of the main pipe; the same being shown in the plan view. The height and the diameter of the branch is next decided, the assumption being that all the branches are the same height and diameter.

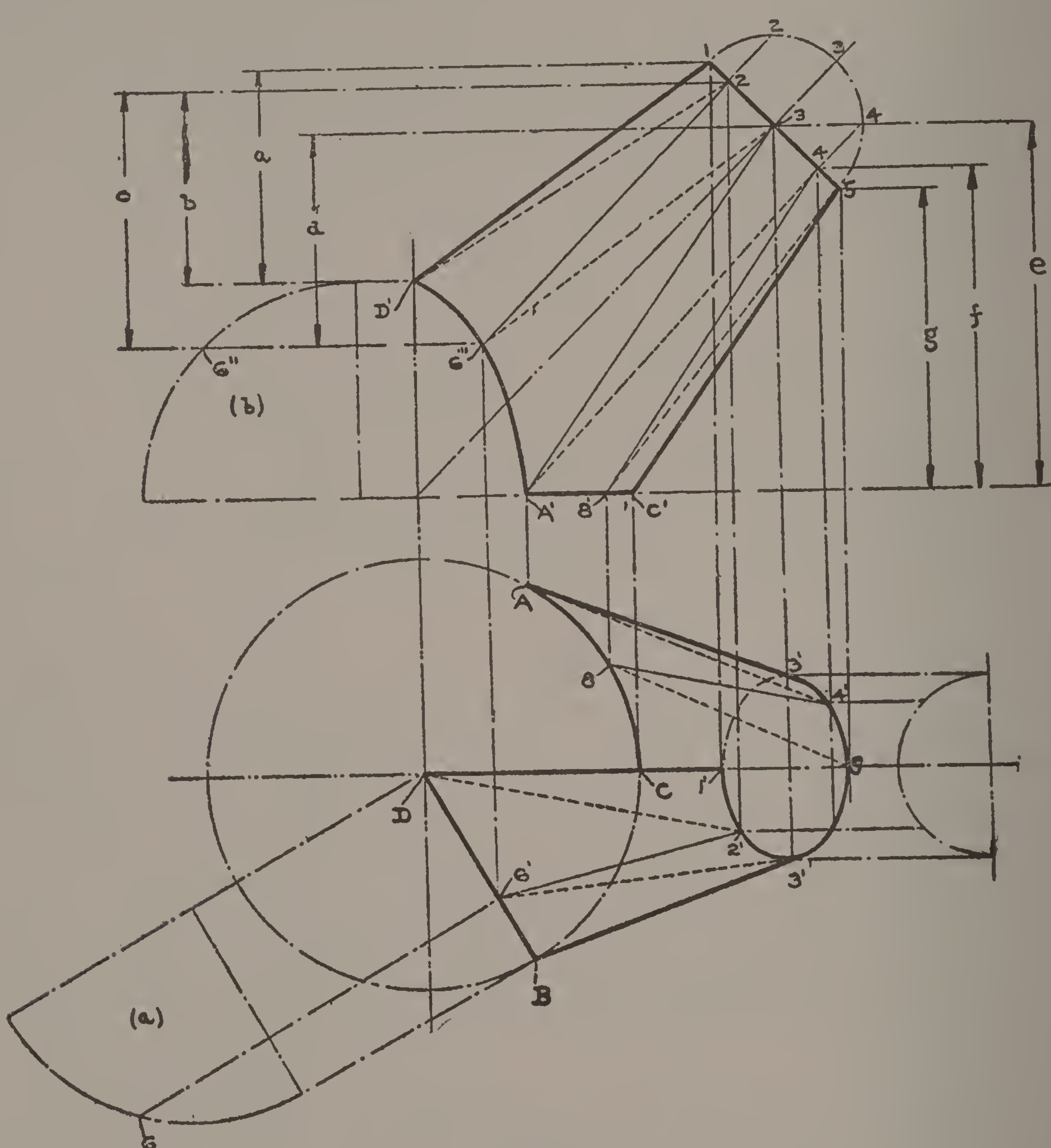

Fig 47

The side elevation of one of the branches, as well as the plan view of it, can not be drawn as readily as in former problems. It is a case of working from one to the other to draw the side elevation and the plan view of the branch pipe. First, the circle in the plan view is divided into three equal parts—the distance from A to B represents one-third of the circle, and is so placed that the distance from A to C, and B to C, are the same on each side of the horizontal construction line as shown in the plan view. Then, the semi-circle as shown in the side elevation is drawn and divided into a given number of equal spaces

–in this case four equal spaces, numbered from 1 to 5 inclusive. A similar semi-circle is drawn in the plan view, being divided into the same number of equal spaces as the semi-circle in the side elevation. The points found on the semi-circle of the side elevation are then extended to the slant line from 1 to 5, and from said line are projected to the plan view. Then lines are projected from the points found on the semi-circle, plan view, to intersect the lines projected from the side elevation, thereby developing the elliptical hole as shown in the plan view, the points of intersection of the afroesaid lines being numbered 1′, 2′, 3′, 4′ and 5′.

Inspection of the respective view will reveal that the branches are not only connected to the main pipe, but are also connected to one another, thereby making three seams which all come together in the center, or at the point D as shown in the plan view. The outline of the seam is shown in the side elevation from C′ to A′ to D′. The distance from C′ to A′, as will be noted, is the foreshortened length of the distance from C to A of the plan view. The distance A′ to D′ is the manner in which the seam, shown by the line from B to D of the plan view, appears in the side elevation.

The line from A′ to D′ is irregular, being developed in the following manner: Draw the quadrant as shown in (a) and divide into two equal spaces to correspond with the number of spaces from 1′ to 3′ of the elliptical hole of the plan view. From point 6 of the view (a) project a line at right angles to the line B to D, thereby locating the point 6′. From 6′ project a vertical line of indefinite length, after which draw the quadrant as shown in the view (b), dividing the quadrant into two equal spaces to correspond with the equal spaces of plan (a), and then from the point 6″ project a horizontal line to intersect the vertical line projected from point 6′, thereby creating point 6″′. The irregular curve from A′ to D′ is then drawn, passing through the point 6″′.

The foregoing completes the drawing of the outline of the plan and side elevation, and also locates the points for drawing the foreshortened lines. The dotted and solid foreshortened lines are then drawn in both the side elevation and the plan view, and in this problem the foreshortened lines are necessary in the side elevation in order to secure the altitudes. In other problems the foreshortened lines have been shown in the side elevation and not used in every case, it being explained that they were merely shown to set forth the underlying principles of triangulation.

The altitudes *a*, Fig. 47, as will be noted, is the vertical height of the heavy line from 1 to D′, the altitude *b* the height of the dotted line from 2 to D′; the altitude *c* the height of the solid line from 2 to 6″′; the altitude *d* the height of the dotted line from 6″′ to 3; the altitude

e the height of the solid line from 3 to A′; the altitude *f* the height of the dotted line from A′ to 4, and the height of the solid line from 4 to 8′; nd the altitude *g* the height of the dotted line from 8′ to 5, and the height of the solid line from 5 to C′.

In Fig. 48 the diagram of triangles are shown, the altitudes *a, b, c, d, e, f* and *g* being made to correspond with the corresponding altitudes of the side elevation. In drawing up the triangles as shown in Fig. 48, the greatest of care must be taken. The base of the triangle, altitude *a,* Fig. 48, is the length of the solid line from 1 to D of the plan view. The hypotenuse of the triangle, altitude of Fig. 45, should

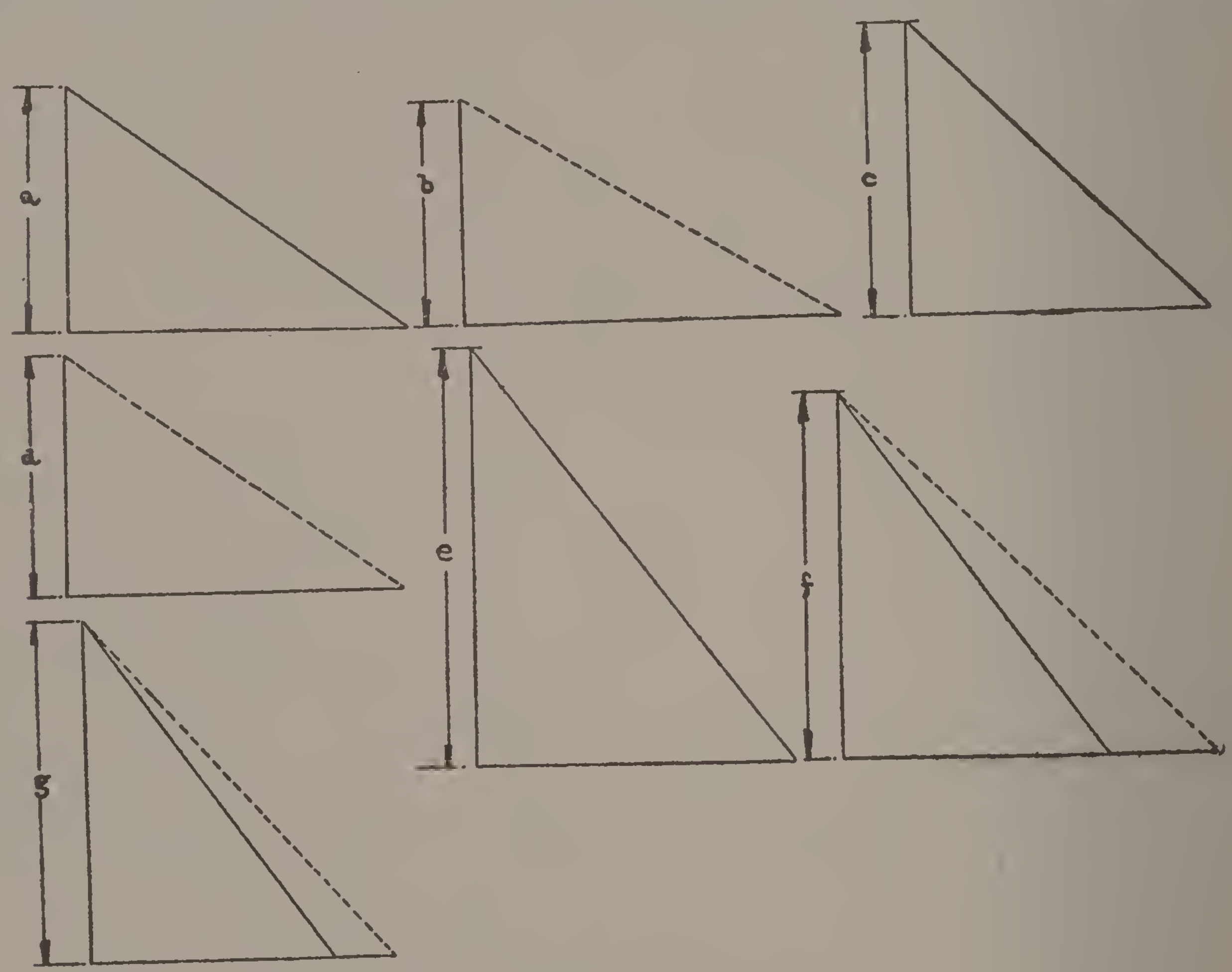

Fig. 48

equal the length of the solid line from 1 to D′ of the side elevation. The base of the triangle of altitude *b* of Fig. 48, should be made equal to the dotted line of the plan view from D to 2′; the base of the triangle of the altitude c of Fig. 48 should be made equal to the solid line of the plan view from 2′ to 6′; the base of the triangle of altitude *d* of Fig. 48, should be made equal to the dotted line of the plan view 3′ to A, or from 3′ to B; the bases of the triangles of the altitude *f* of Fig. 48 should be made equal in length to the dotted line from A to 4′, and the solid line from 4′ to 8 of the plan view; and the bases of the triangles of altitude *g* of Fig. 48 should be made equal to the length of the dotted line from 8 to 5′, and from the horizontal construction line from 5′ to C of the plan view.

To develop the pattern, Fig. 49, make the line 1 to D' equal to hypotenuse of the triangle of altitude *a*, Fig. 48, or equal to the solid line of the side elevation of the Fig. 47, from 1 to D'. Then set the dividers equal to the space from 1 to 2 of the semi-circle of the side elevation, and using point 1, Fig. 49, as a center, draw an arc. Next, set the trammels equal to the length of the slant line of altitude *b*, Fig. 48, and using point D' of Fig. 49 as a center, draw an arc intersecting the arc previously drawn, thereby creating point 2. Then, using point 2 as a center point, trammels set equal in length to the solid slant line of altitude *c*, Fig. 48, draw an arc. With another pair of dividers set equal to one of the spaces of the quadrant of view (a), Fig. 47, and using point D', Fig. 49, as a center, draw an arc intersecting the arc previously drawn, thereby creating point 6'''. With point 6''' as a

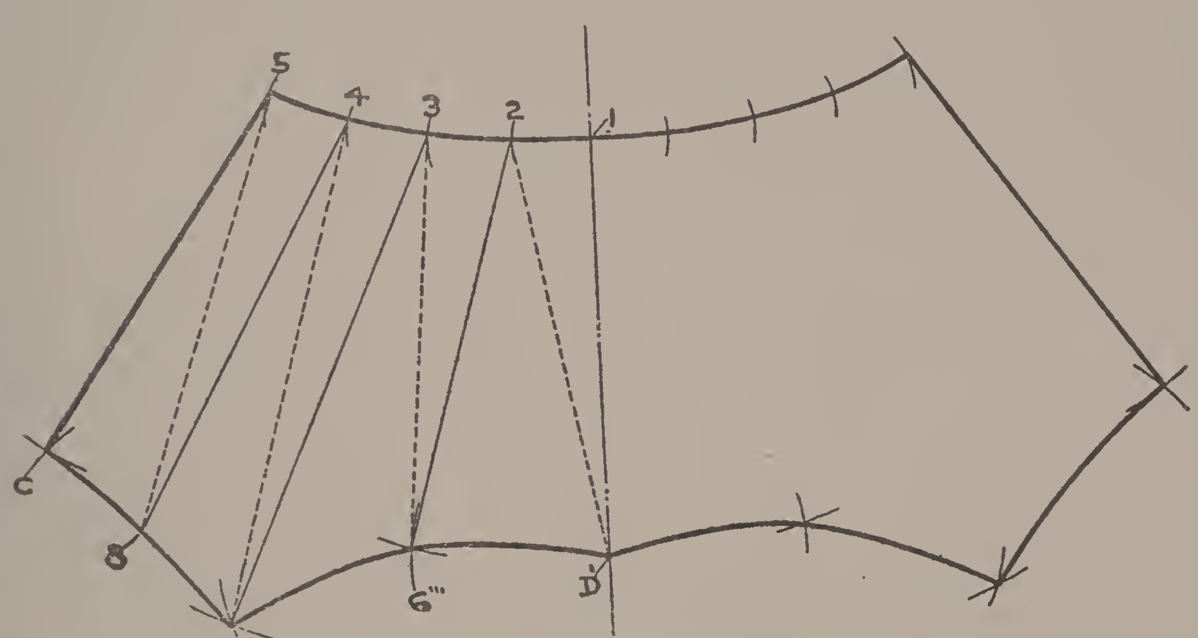

Fig. 49

center, trammels set equal in length to the dotted line of altitude *d*, Fig. 48, draw an arc. Then, with point 2, Fig. 49, as a center and dividers set to small space, draw an arc intersecting the arc previously drawn, thereby creating point 3.

Using point 3 as a center, trammels set equal in length to the solid line of altitude *e*, Fig. 48, draw an arc, and then with point 6''' as a center, dividers set equal to the same space as between points D' and 6''', draw an arc intersecting the arc previously drawn, thereby creating point A. At this point a change takes place. The spaces from 1 to 2, 2 to 3, etc., at the top of the pattern, Fig. 49, will be alike, while the spaces at the bottom of the pattern will not be alike throughout the whole development. The spaces from D' to 6''' and from 6''' to A were taken from the space in the plan view marked (a), while the balance of the spaces will be taken from another part of the plan view.

Continuing the development, using point A, Fig. 49, as a center

point, trammels set equal in length to the dotted line of the altitude *f*, Fig. 48, draw an arc, and then with dividers set to the small space as used for the top of the pattern and using point 3, Fig. 3, as a center, draw an arc intersecting the arc previously drawn, thereby creating point 4. With point 4 as a center, trammels set equal to the solid line of altitude *f*, Fig. 48, draw an arc, and then using point A, Fig. 49, as a center, dividers set equal to the space from A to 8 of the plan view, draw an arc intersecting the arc previously drawn, thereby creating point 8.

With point 8 as a center, trammels set equal to the dotted line of the altitude *g*, Fig. 48, draw an arc, and then using point 4 as a center, dividers set to small space, draw an arc intersecting the arc previously drawn, thereby creating point 5, Fig. 49. Using point 5 as a center, trammels set equal to the solid line of altitude *g*, Fig. 48, draw an arc, and then with point 8 as a center, dividers set the same as last time, draw an arc intersecting the arc previously drawn, thereby creating point C. Add laps, etc., and pattern for the branch pipe is complete.

INTRODUCTION.

33. Aside from the parallel line method and triangulation, certain patterns can be more readily and best be developed by the RADIAL LINE method. Its use, however, except approximate developments, is confined solely to forms that radiate from a common apex. A body may be telescoping in form, such as the taper course, Fig. 44, Art. 31, but the aforesaid taper course could not be readily developed by the radial line method due to the eccentric shape of the structure.

TO DEVELOP THE PATTERN OF A CONE.

34. The developing of the pattern of a cone is very simple. However, it affords an opportunity to illustrate the foregoing remarks in Art. 33. The cone as shown in Fig. 50 radiates from the apex *a;* the distance *b* on each side of the vertical construction line being the same. In the half plan view, which is all that is needed to represent the object – and which is never drawn up when laying out the pattern for a cone – the points *b′* are the same distance from the center point *a′*. The cone, Fig. 51, therefore, explains fully the telescoping forms which can be developed by the radial line method.

To develop the pattern of a cone as shown in Fig. 51, the measurements from *a* to *b* must be ascertained. This is usually done by drawing up a half side elevation. Then with trammels set equal to the distance *a* to *b*, Fig. 50, the point *a*, Fig. 51, is used as a center to an arc drawn. The length of the arc, if the pattern is to be in one piece, must be great enough to permit the distance *b* to *c*, Fig. 51, to be equal to the circumference of the base of the cone of Fig. 50. The pattern, Fig.

51, is divided into four equal parts, each part representing one-fourth of the pattern; the distance b' to b' of Figs. 50 and 51 corresponding.

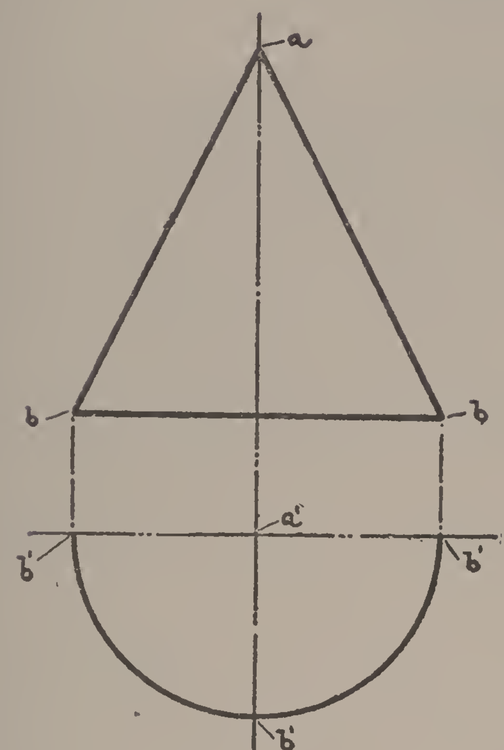

Fig. 50.

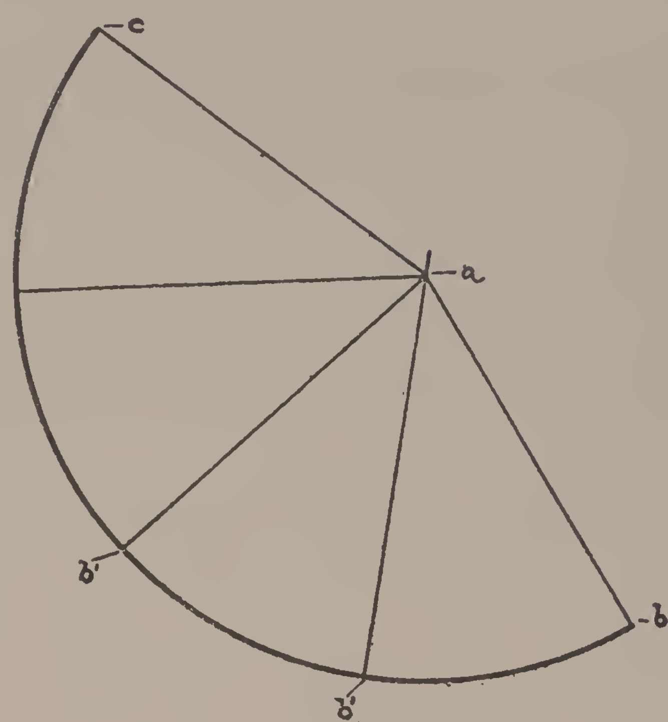

Fig. 51.

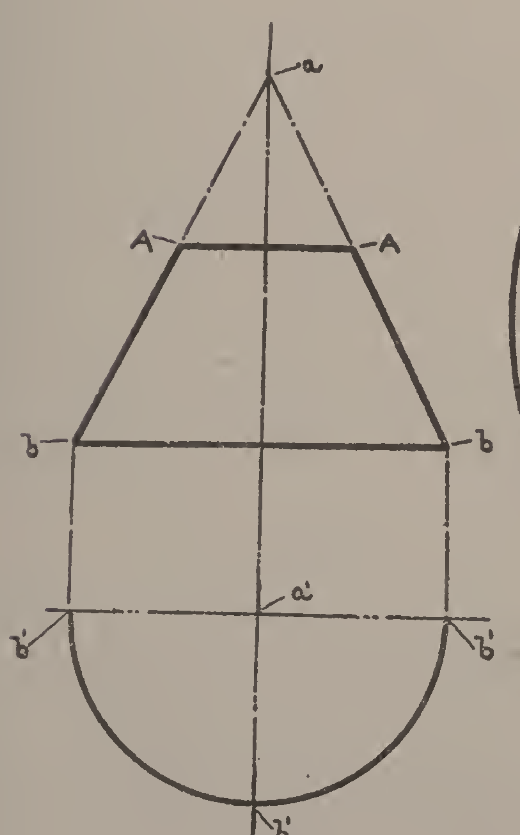

Fig. 52.

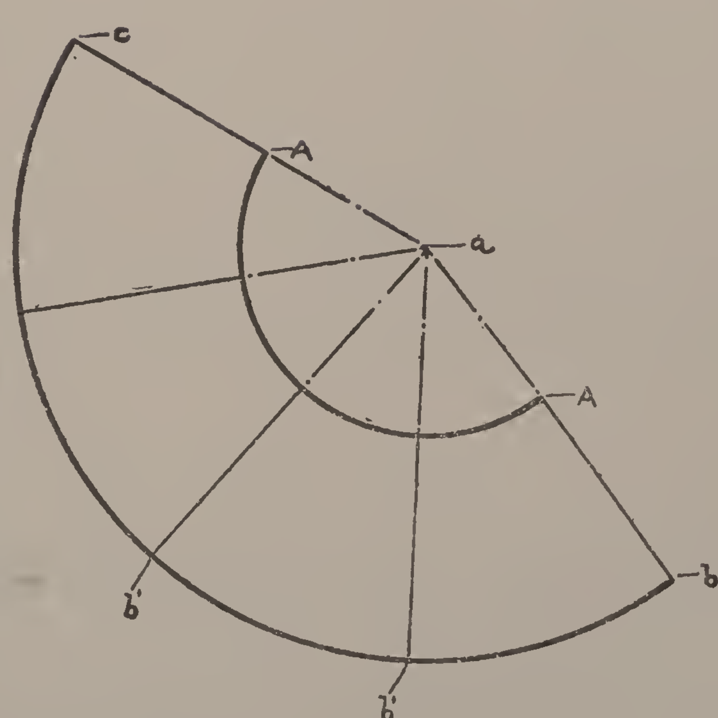

Fig. 53.

Laps are allowed and rivet holes are installed and then the pattern is ready to be formed to the shape as shown in Fig. 50. It is usual, how-

ever, to punch a small hole at *a*, Fig. 51, to permit the material to this point to gather.

DEVELOPING A FRUSTUM.

35. The frustum as shown in the illustration, Fig. 52, is that part of a cone contained between the base and the parallel plane AA to the base. The letters *a*, *b*, *b′* and *c* represent the same parts as the same letters do in Figs. 50 and 51. In fact the pattern, Fig. 53, is the same as Fig. 51, except the additional full line from A to A, which line in Fig. 53, represents the upper base AA of Fig. 52. The line AA is drawn by setting the trammels equal to the distance from *a* to A, Fig. 52, and then using *a*, Fig. 53, as a center draw an arc intersecting the lines from *a* to *b*, and *a* to *c*.. The circumference for the upper base need not be computed and laid off on the arc as is the case with the lower base. The circumference of the upper base at the points AA, where the arc intersects the lines as shown.

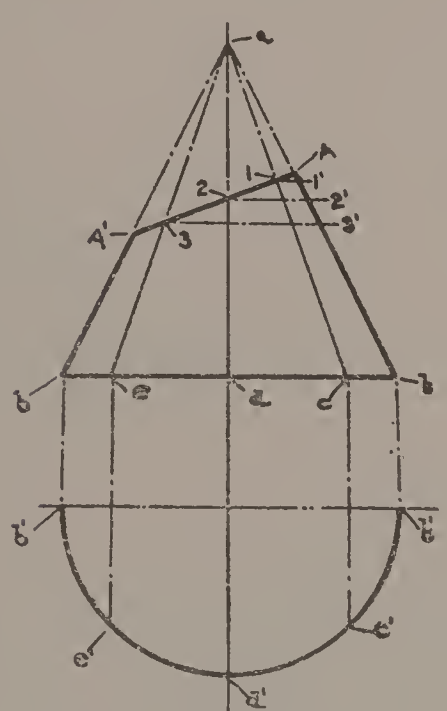

Fig. 54.

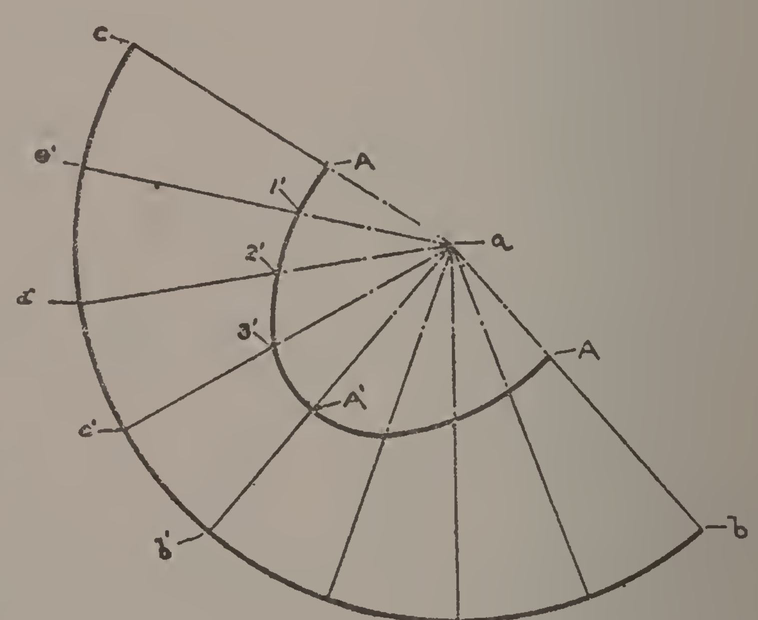

Fig. 55.

TO DEVELOP THE PATTERN FOR A TELESCOPING TRANSITION PIECE WITH UPPER BASE OBLIQUELY INCLINED.

36. The transition piece with the upper base obliquely inclined as shown in the illustration, Fig. 54, is the same as the frustum in all respects except the upper base represented by the letters AA′. The development of the pattern, Fig. 55, is more difficult than the development of the pattern, Fig. 53, requiring more data to be secured from the side elevation; to obtain the same the plan view must necessarily be drawn.

The outline of the pattern, Fig. 55, is developed in the usual way—that is, to set the trammels equal to the distance from *a* to *b*, Fig. 54, and then using *a*, Fig. 55, as a center, draw an arc, laying off on the arc the distance *b* to *c* equal to the circumference of the base of the body.

The irregular line AA′, Fig. 55, representing the obliquely inclined base of Fig. 54, can not be developed as easily as the line AA of Fig. 53. First, it is necessary to divide the semi-circle of the plan view, Fig. 54, into a given number of equal parts—in this case four equal parts. From the points found on the semi-circle lines are projected to the lower base line *bb*, and from these points to the apex *a*. Now, where the slant lines projected from the points *e*, *c* and *d* intersect the slant line AA′, project horizontal lines to the slant line *a* to *b*, thereby creating the points 1, 2 and 3.

Inspection of Fig. 54 will reveal that the lines from *a* to *b* are their true length, while the lines from *a* to *c*, and *a* to *d* and *a* to *e* are not their true length, being only their foreshortened length. Since these lines are only foreshortened lines the true lengths of the lines between the lower base and the obliquely inclined vase can only be found by projecting over the points 1, 2 and 3 the horizontal lines as shown; thus, making the distance 1′ to *b* the true length of the foreshortened line from 1 to *c*; the distance 2′ to *b* the true length of the foreshortened line from 3 *c*.

To develop the irregular line through points A, 1′, 2′, 3′ and A′, Fig. 55, the arc from *a* to *b* must be divided off into the same number of equal spaces as are in the base of the transition piece, which is eight equal spaces. Lines are then projected from the points *b*′, *c*′, *d*′ and *c*′ to the apex *a*, and the distance *b*′ to A′ is made equal to the distance *b* to A′, Fig. 54; the distance *c* to 3, Fig. 55, is made equal to the distance from *b* to 3′, Fig. 54; the distance from *d*′ to 2, Fig. 55, is made equal to the distance from *b* to 2′, Fig. 54; and the distance from *e*′ to 1′, Fig. 55, is made equal to the distance from *b* to 1′, Fig. 54. Add laps, etc., and pattern is complete.

TO DEVELOP THE PATTERN FOR A FOOT-TUB.

37. In Fig. 56 is shown the side elevation and half plan view of a transition piece, such as a foot-tub. The principles of radial line development are shown more extensively in this problem, for the bases are elliptical, and the sides flaring uniformly. Should, however, the sides not flare uniformly then the pattern could not be developed ac curately by the radial line method, triangulation being the proper method, unless accuracy was not essential, and then an approximate method would do.

When describing in Art. 34 the securing of the data for developing

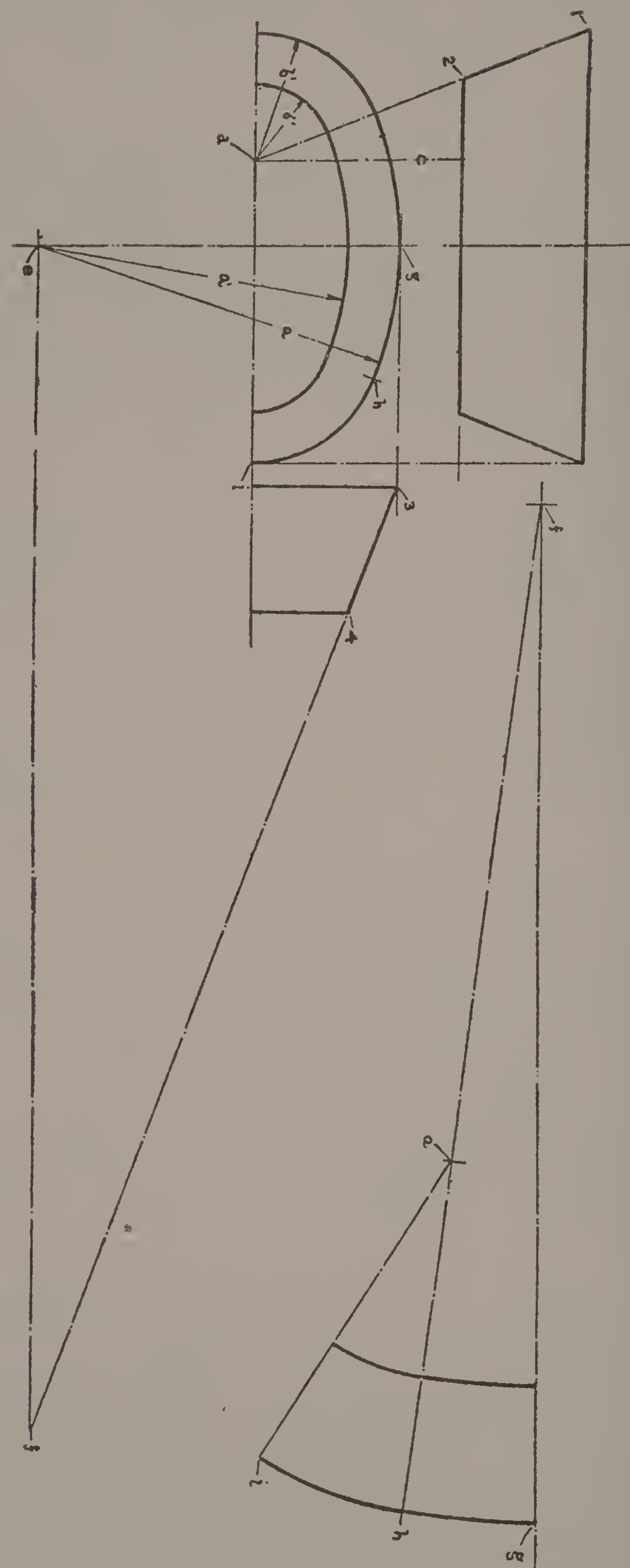

Fig. 56. Fig. 57.

the pattern of the cone, it was stated that the plan view need not be drawn up, or in other words all the data could be secured from the side elevation. When describing in Art. 36 the securing of data for developing of the transition piece with the upper base obliquely inclined, the need for both the plan view and the side elevation was apparent.

To develop the quarter pattern, Fig. 57, of the transition piece as shown in Fig. 56, it is necessary in order to secure the data to draw the side elevation, a half plan view and a half end view. The side elevation, end view and plan view are drawn to the desired measurement, the radii a, a', b and b' showing how the plan view is drawn so that the sides will taper uniformly. The difference between the radii a and a' should be the same as the difference between b and b'.

The plan view may be located as near or as far from the side elevation as desired, for this has no bearing on securing the data for laying out the pattern. First, extend the line from 1 to 2 of the side elevation until it intersects the vertical line c. The vertical line c is projected from the center point d of the radii b and b'. It happens in this case that the plan view is located from the side elevation just the proper distance to make the slant line from 1 to 2 intersect the vertical line c at the point d on the horizontal construction line of the plan view.

Next, the slant from 3 to 4 is extended an indefinite length, and then from the center point c of the radii a and a' and at right angles to the vertical construction line, draw the horizontal line until it intersects the slant line from 3 to 4 at point f. To develop the pattern, Fig. 57, set the trammels equal in length from points 3 to f, Fig. 56, and then using point f, Fig. 57, as a center draw an arc. With f as a center point, trammels set equal to the distance 4 to f, Fig. 57, draw another arc.

Then the distance g to h, of Fig. 56 is taken and transferred as shown in Fig. 57, after which the line from h to f *is* drawn. The trammels are then set equal to the distance from 1 to d, Fig. 56, and using point h, Fig. 57, an arc is drawn intersecting the line from h to f at point d. Then, using point d as a center, trammels set as before, draw an arc of indefinite length. Still using point d as a center, but trammels changed to the distance from 2 to d, Fig. 56, draw an arc. The distance from h to 1 of the plan view, Fig. 56, is then ascertained, and using h, Fig. 57, as a center, draw an arc intersecting the arc at point 1, and from this point draw the line to point d as shown. Add laps, etc., and pattern is complete.

DEVELOPING AN ELLIPSE.

38. In Art. 37 it was mentioned that the base of the transition piece was elliptical shape. An approximate method of laying such a base

was given, the same being accurate enough for general purposes. A more accurate method of developing an ellipse is shown in Fig. 58. First, the major and minor diameter must be known, and then using the point *a* as a center, trammels set equal to the respective radii, draw two circles as shown.

Thus, if the major diameter is 16 inches and the minor diameter is 10 inches, then the radius *c* would be eight inches, and the radius *b* would be five inches. Following the drawing of the circles, divide each quarter into a given number of equal spaces – any amount – the inner and the outer circles to have the same number of spaces.

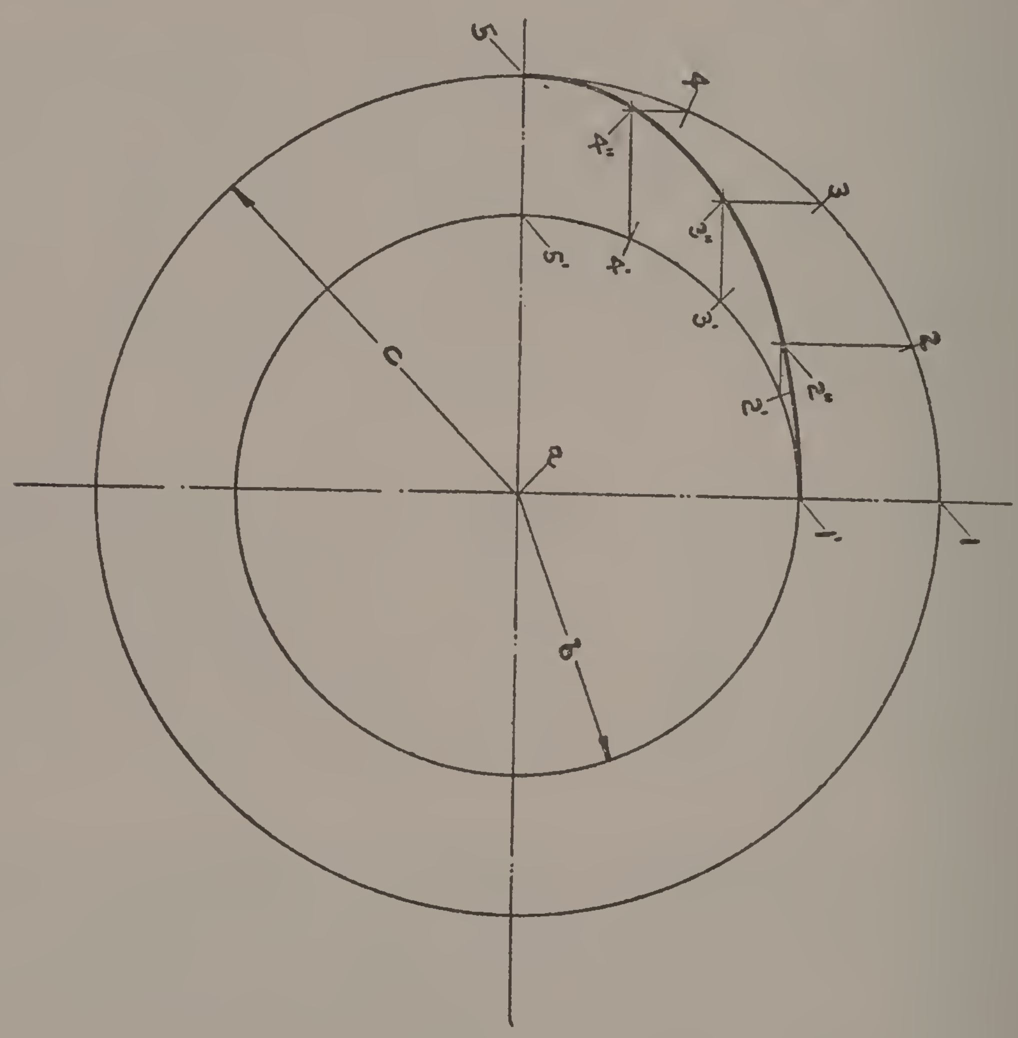

Fig. 58.

In Fig. 58 only one-fourth of the circle is divided, this being all that is necessary in order to demonstrate the method, it being understood that all quarters are alike. Then the points on the inner and outer quadrant are number; those on the outer quadrant from 1 to 5 inclusive, and those on the inner quadrant from 1′ to 5′ inclusive. Lines from points 2, 3 and 4 are then projected down, while lines from points 2′, 3′ and 4′ are projected over to intersect the foregoing lines, thereby creating the points 2″, 3″ and 4″. Then draw the irregular curve and the eliptical hole is developed.

TELESCOPING FORMS

TO DEVELOP THE PATTERN FOR A TELESCOPING TRANSITION PIECE INTERSECTING A CYLINDER.

39. In Fig. 59 is shown a telespocing transition piece where the upper is in the horizontal plane and lower base intersects a cylinder. The data for laying out the pattern can anly be secured after the side elevation is completed by projecting points, hereinafter to be mentioned, from the end view to the side elevation. The side elevation, except the irregular line from a to b, and the end elevation are first drawn. Then the semi-circles in both the side elevation and end view are drawn and divided into any number of equal spaces—in this case three equal spaces, numbered from 1 to 4 inclusive in the side elevation, and from 1′ to 4′ in the end view.

From these points lines are then projected to the horizontal line 1 to 1 of the side elevation and 4′ to 4′ of the end view; hence to the points c and c'. From the points d and e, where the slant lines to the apex c' intersect the arc of the end view, project horizonal lines to intersect the corresponding lines of the side elevation, thereby creating the points d' and e'; also, project from point 4′ a line to intersect the center construction line of the side elevation, thereby creating point 4″. The irregular curve from b to d' to e' to 4″ is then drawn and the side elevation is complete.

40. The developing of the pattern, Fig. 60, is very simple. The trammels are first set to the distance c' to 4′, Fig. 59, end view, and then using point c', Fig. 60, as a center, draw an arc. The length of the arc, shown from 4′ to 4′, is made equal to one-half of the circumference (the illustration Fig. 60 is only a half pattern) and then the circumference divided off into the same number of equal spaces as the semi-circle in the end view, Fig. 59.

The points so located are numbered 1′, 2′ and 3′, and from these points lines are projected to the apex c. Next, the length of the foreshortened line from c' to a' of the same view. With trammels set to this distance and with point c', Fig. 60, as a center point. draw an arc intersecting the line 1′ to c', thereby creating point a'.

The length of the foreshortened line from d to c', Fig. 59, is secured, the same being equal to the distance from c' to d'' of the end elevation. Setting trammels to this length and using point c', Fig. 60, as a center point, draw an arc intersecting the line from 2′ to c', thereby creating point d''. The length of the foreshortened line from e to c' of the end elevation is then ascertained, the same being equal to the distance from c' to e''. Then using point c', Fig. 60, as a center point draw an arc

intersecting the line from 3′ to c′, thereby creating the point e″. Draw the irregular curve from d′ to d″ to e″ to 4′, adding for laps, etc., and half pattern is complete.

41. The hole in the cylinder can also be developed by data obtained from Fig. 59. First draw the stretchout line MN, Fig. 61, making the distance between *a* to *d*, *d* to *e*, *e* to 4′ to correspond to the corresponding distance of the side elevation, Fig. 59. From these points project above and below the stretchout line MN vertical lines of indefinite length. The distance *a* to *a*′, Fig. 59, is then taken and set off on each side of the line MN as shown in Fig. 61. Next, the distance from *d*′ to the center construction line of the side elevation, Fig. 59, is taken and set off on each side of the line MN, Fig. 61, as shown. The measurement from *e*′ to the vertical center construction line, Fig. 59, is taken

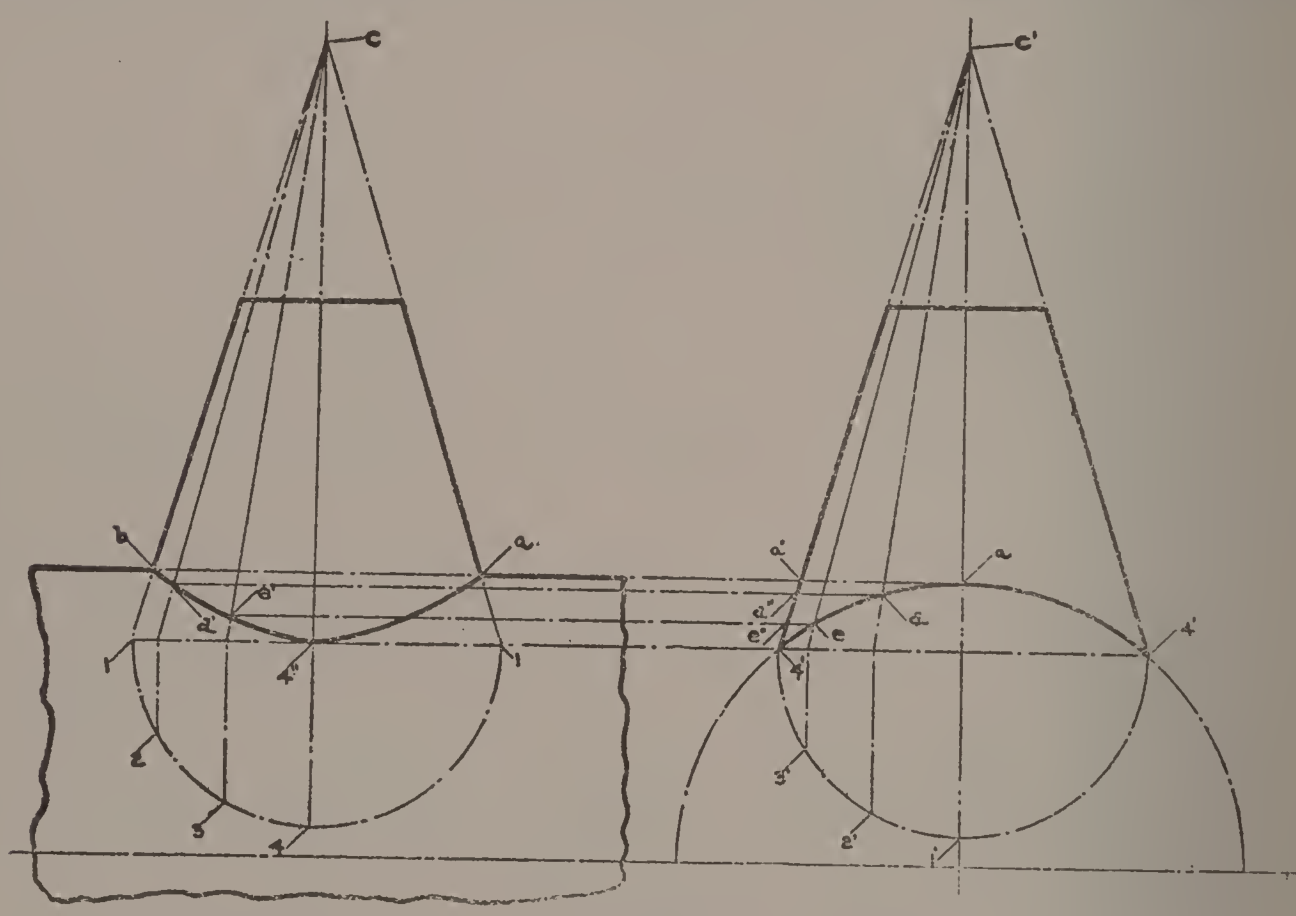

Fig. 59.

and set off on each side of the line MN, Fig. 61, as shown, after which the irregular line is drawn through the points *a*′ to *d*′ to *c*′ to 4′, and the irregular hole as required in the cylinder is developed.

TO DEVELOP THE PATTERN OF A TELESCOPING TRANSITION PIECE INTERSECTING A CYLINDER AT AN ANGLE.

42. In Fig. 62 is shown a telescoping transition piece intersecting a round body at an oblique angle. The principles of this problem are found more or less in other problems, the chief feature being the development of the irregular line from *a* to *b*. The side elevation is first

drawn, except the irregular line from *a* to *b*, and then the quadrant of the plan view is drawn.

Next, the semi-circle as shown in the side elevation is drawn and divided into equal spaces – any amount – in this case four equal spaces, numbered from 1 to 5 inclusive. Lines are then drawn from the base of the telescoping transition piece to the apex *c*. From the points 2′, 3′ and 4′, lines are projected to the plan view. On these vertical lines the distances from 4 to 4′, 3 to 3′ and 2 to 2′ are made to correspond to the corresponding distances in the side elevation. Lines are then drawn from points 2′, 3′ and 4′ of the plan view to the apex *c*′.

Inspection will reveal that the line from *c* to 3′ of the plan view intersects the quadrant at *d;* the line from *c*′ to 2′ intersects the quad-

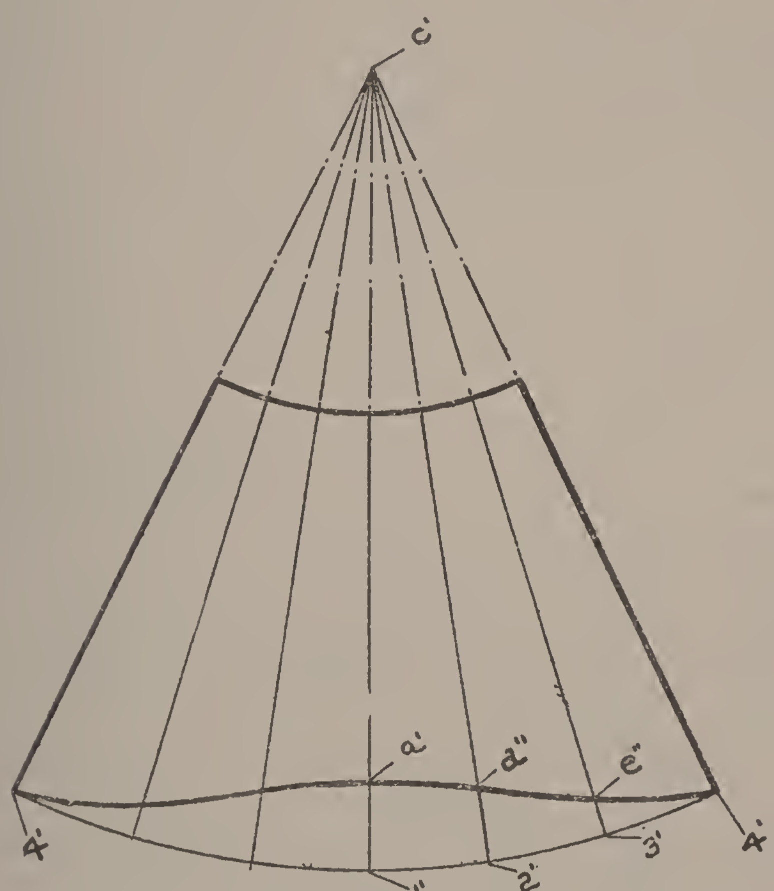

Fig. 60.

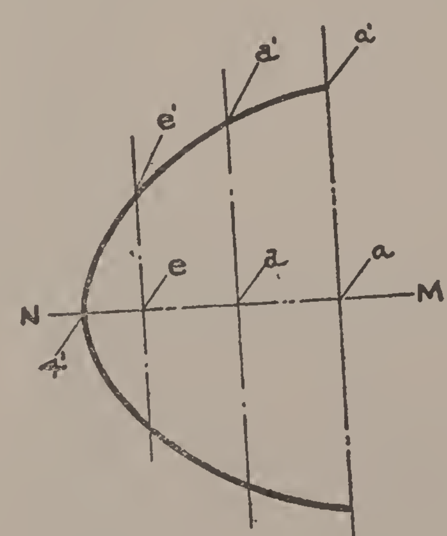

Fig. 61.

rant at *e;* and the line from *c*′ to 4′ intersects the quadrant at *f*. Then, from points *d*, *e* and *f* project lines to intersect the lines in the side elevation, thereby creating the points *d*′, *e*′ *and f*′. The irregular line from *a* to *b* through the points *d*′, *e*′ and *f*′ can then be drawn.

43. To develop the pattern, Fig. 63, set the trammels equal to the distance *c* to *b*, Fig. 62, and then using point *c*″, Fig. 63, as a center draw an arc of indefinite length. The arc is then divided into four equal spaces, making the distance from *b* to 2, 2 to 3, etc., of Fig. 63 to correspond with the corresponding distances of the semi-circle of the side elevation.

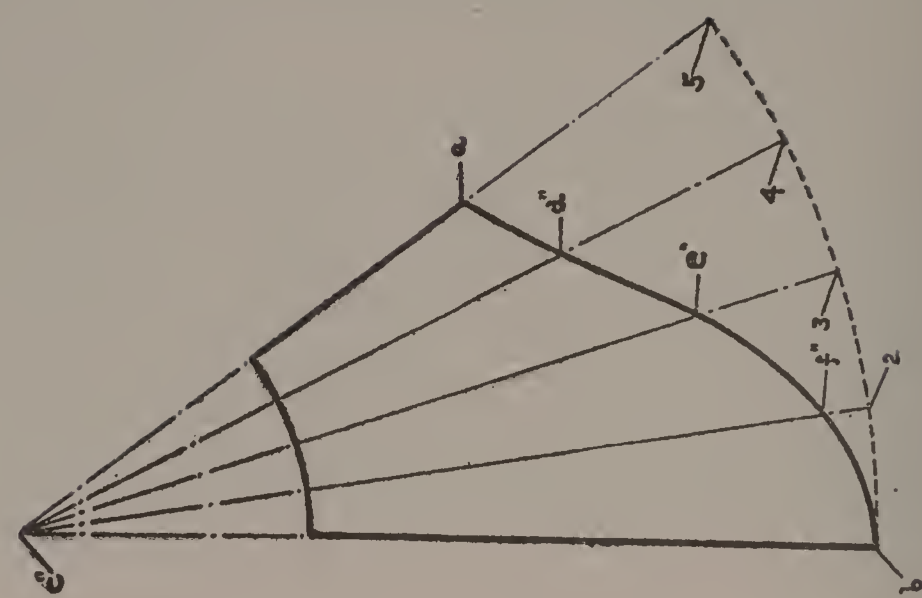

Fig. 63.

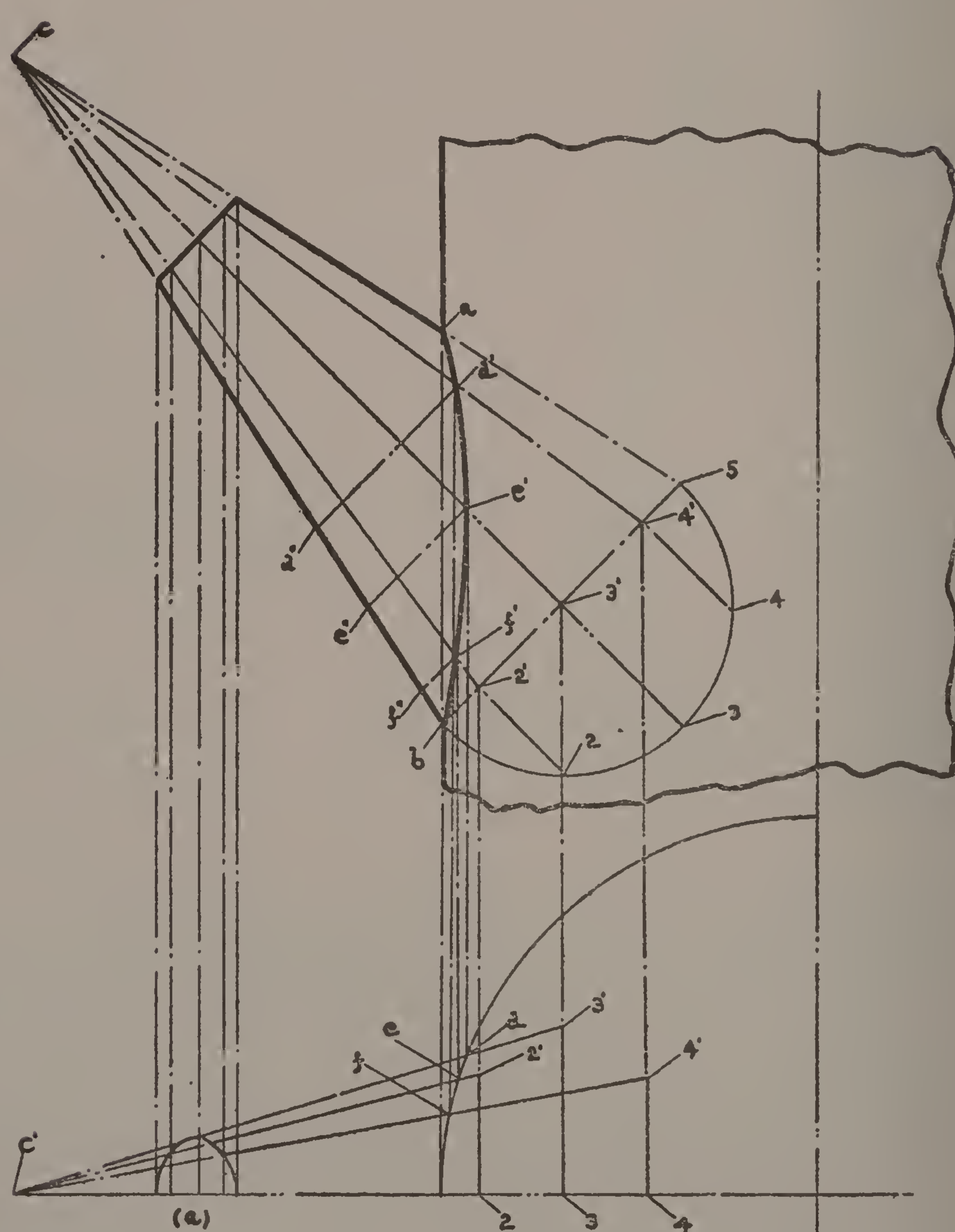

Fig. 62.

Then the length of the foreshortened line from f' to c of the side elevation is found, the same being equal to the distance from e to f'', and then using point c'', Fig. 63, as a center, draw an arc intersecting the line from 2 to c'', thereby creating point f''. The length of the foreshortened line of the side elevation from e' to c is ascertained, the same being equal to the distance from c to e″, and then using the point c'',

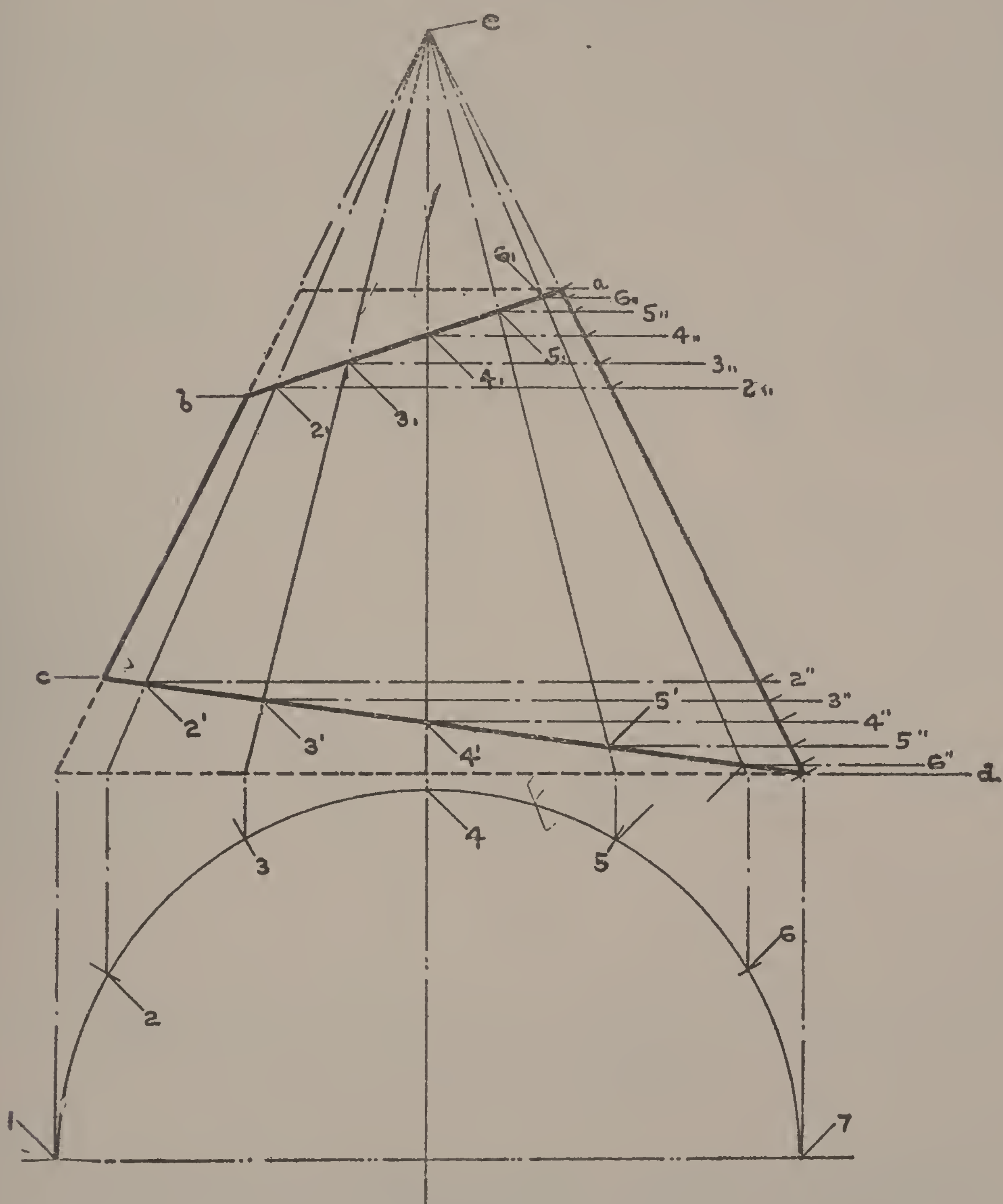

Fig. 64.

Fig. 63, as a center, draw an arc intersecting the line from 3 to c'', thereby creating point e''.

The length of the foreshortened line from d' *to* c, Fig. 62, is ascertained, the same being equal to the distance c to d'', and then using point c'', Fig. 63, as a center, draw an arc intersecting the line from

4 to c'', thereby creating point d''. The length of the line from a to c, side elevation, is then taken, and using point c'' as a center, draw an arc intersecting the line from 5 to c'', thereby creating point a, Fig. 63. Add laps, etc., and the half pattern is complete. The development of the hole at (a) is not described. Having been described in a prior problem, coupled together with the fact that the lines show fully the movement no further remarks are necessary.

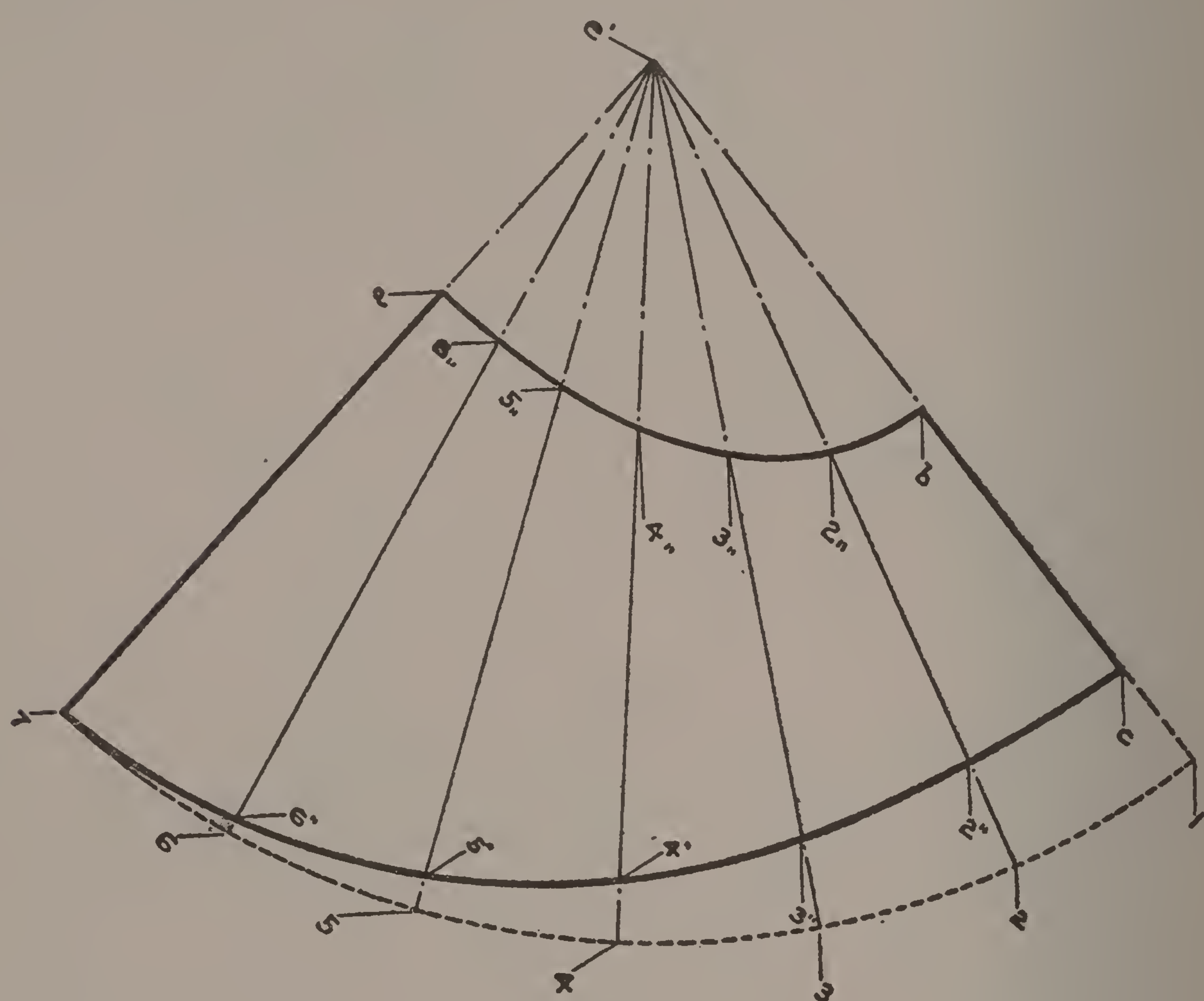

Fig. 65.

TO DEVELOP THE PATTERN OF A TRANSITION PIECE HAVING BOTH THE UPPER AND THE LOWER BASES OBLIQUELY INCLINED.

44. In Fig. 64 is shown a transition piece which has both the upper and lower bases obliquely inclined. The slant line a to b represents the upper base and the slant line c to d the lower base. Since the transition piece is uniformly telescoping, all the lines radiate from the apex e. First the side elevation is drawn and then the plan view. The semi-circle is all that is necessary in the latter. It is divided into any number of equal spaces – in this case into six equal spaces – numbered from 1 to 7 inclusive.

Lines from these points are then projected to the dotted lower base

line as shown; hence, to the apex *e*. Where the lines intersect the upper and lower bases the points $2_{\prime}$, $3_{\prime}$, $4_{\prime}$, $5_{\prime}$, $6_{\prime}$, and $2'$, $3'$, $4'$, $5'$ and $6'$ lines are projected to the slant line from the apex *e* to *d*, thereby creating the points $2_{\prime\prime}$, $3_{\prime\prime}$, $4_{\prime\prime}$, $5_{\prime\prime}$, $6_{\prime\prime}$, and $2''$, $3''$, $4''$, $5''$ and $6''$.

45. To develop the pattern, Fig. 65, set the trammels equal to the distance *e* to *d*, Fig. 64, using point e', Fig. 65, as a center, draw an arc. On this arc step off six equal spaces, making the spaces from 1 to 7 to correspond with the corresponding spaces of the semi-circle, plan view, Fig. 64. Trammels are then set equal to the distance *e* to *b*, Fig. 64, and using point *e*, Fig. 65, as a center, draw an arc intersecting the line from e' to 1, thereby creating point *b*. Trammels are then set equal to the distance *e* to *c*, Fig. 64, and using point e', Fig. 65, as a center, draw an arc intersecting the line from e' to 1 at *c*.

The distances between $2_{\prime}$ to $2'$, $3_{\prime}$ to $3'$, $4_{\prime}$ to $4'$, $5_{\prime}$ to $5'$ *and* $6_{\prime}$ to $6'$ are foreshortened lines – their true lengths are found on the slant line from *e* to *d*. Thus, the distance from $2''$ to $2_{\prime}$ is equal to the foreshortened line from $2'$ to $2_{\prime}$. The length of the other foreshortened lines are found in a like manner; the same being clearly indicated in the side elevation.

To develop the irregular lines in the pattern, Fig. 65, from *a* to *b*, and *c* to 7, merely requires taking the length of the lines from the side elevation and transferring them to the corresponding lines in Fig. 65. Thus, the distance from e' to $2_{\prime\prime}$ is equal to the distance from *e* to $2_{\prime\prime}$ of Fig. 64; the distance from e' to $2''$, Fig. 65, is equal to the distance from *e* to $2''$, Fig. 64. This process is continued until the points $2_{\prime\prime}$, $3_{\prime\prime}$, $4_{\prime\prime}$, $5_{\prime\prime}$, $6_{\prime\prime}$, and $2''$, $3''$, $4''$, $5''$ and $6''$ are located and then the irregular lines as shown are drawn. Add laps, etc., and half pattern is complete.

LINES.

Fig. 1.

A STRAIGHT LINE is one that does not alter its direction through its entire length, thus A to B, Fig. 1, is a straight line.

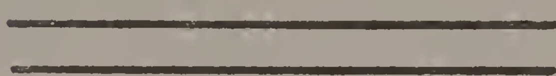
Fig. 2.

Lines which are an equal distance apart are PARALLEL LINES. See Fig. 2.

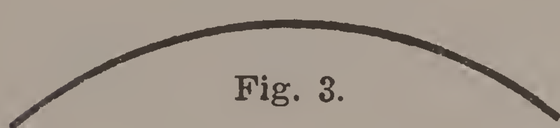
Fig. 3.

A line changing its direction at every point is a CURVED LINE. See Fig. 3.

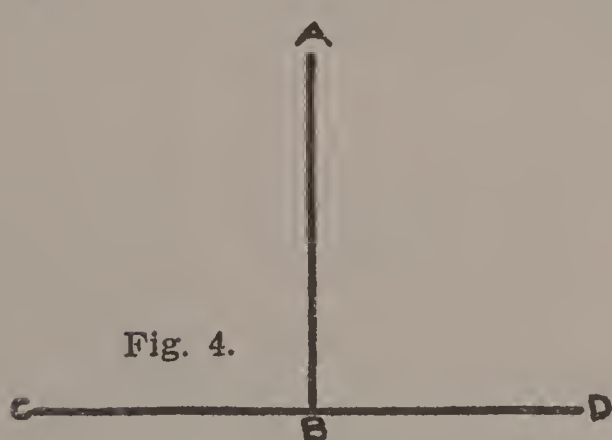

Fig. 4.

A PERPENDICULAR LINE is one that is at right angles to another line. Thus, line AB is perpendicular to line CD, Fig 4.

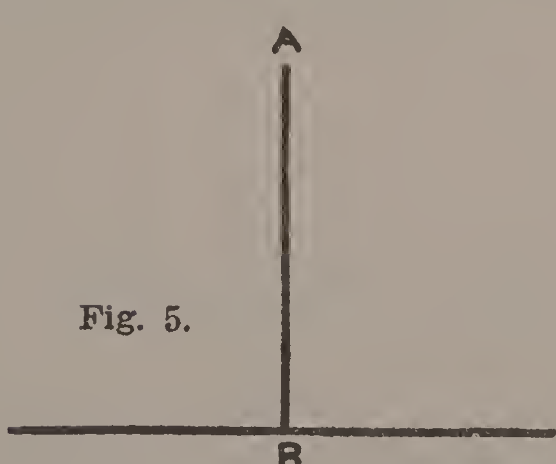

Fig. 5.

A VERTICAL LINE is a line that points towards the center of the earth. The line AB, Fig. 5, is a vertical line; also, in this case a perpendicular line.

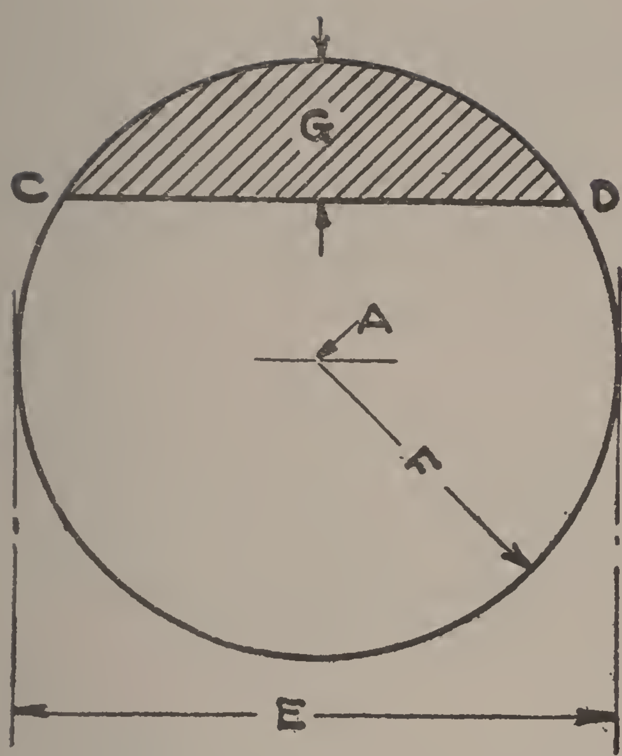

Fig. 6.

The illustration, see Fig. 6, bounded by a curved line, every point of which is the same distance from the center A, called the APEX, is a CIRCLE. The curved part of the circle from C to D is called an Arc; the shaded part is called a SEGMENT; the horizontal distance from C to D is a CHORD; the over-all distance E, passing through the center of the circle, is the DIAMETER; and the distance F is the RADIUS.

Every circle, regardless of its diameter, has 360 parts, called DEGREES; each degree is subdivided into 60 parts, called MINUTES, and each minute is subdivided into 60 parts, called SECONDS. The total distance around the circle is called the CIRCUMFERENCE. One-fourth of a circle is called a quadrant.

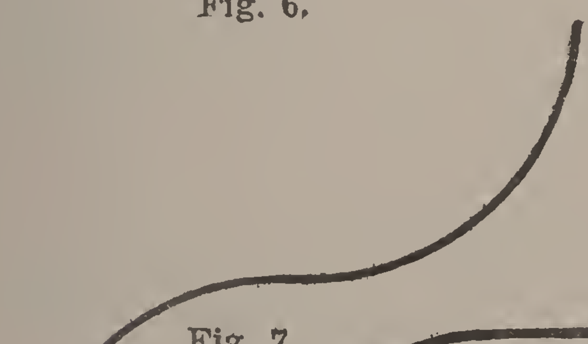

Fig. 7.

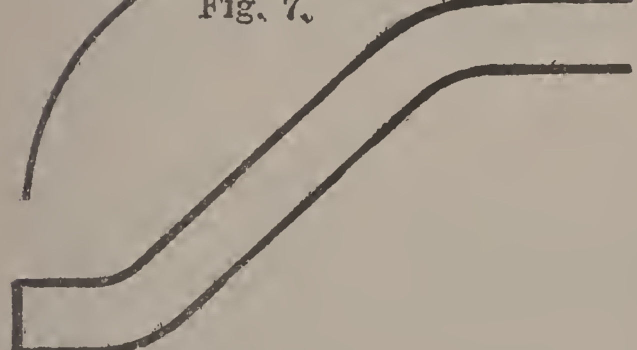

Fig. 8

A curved line as shown in Fig. 7 is called an IRREGULAR CURVE; the illustration, Fig. 8 is called an OFFSET; also, a OGEE CURVE.

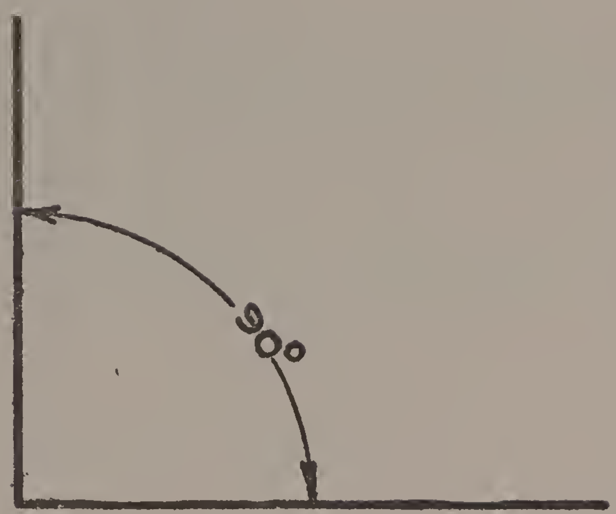

Fig. 9.

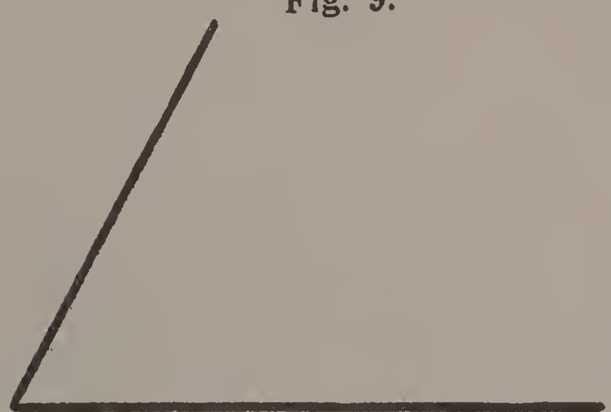

Fig. 10.

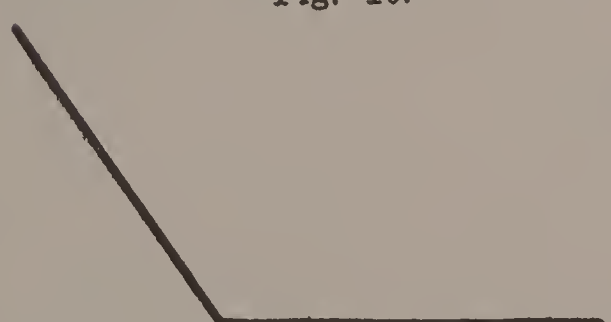

Fig. 11.

An opening between two lines which intersect or meet is called an ANGLE; the meeting point is called the VERTEX. In Fig. 9 is shown a RIGHT ANGLE, so called as the vertical line is at 90° or at right angles to the horizontal line.

In Fig. 10 is shown an ACUTE ANGLE, so called as the angle is less than a right angle. In Fig. 11 is shown an OBTUSE ANGLE, so called as the angle is more than a right angle.

The BASE is the side of a plane figure on which the structure is supposed to stand. The line C to D, Fig. 4, is the base line.

The ALTITUDE of a structure is its height, thus, the distance A to B, is the altitude of Fig. 4.

A line touching a curve as does the line A to B, Fig. 12, is said to be TANGENT.

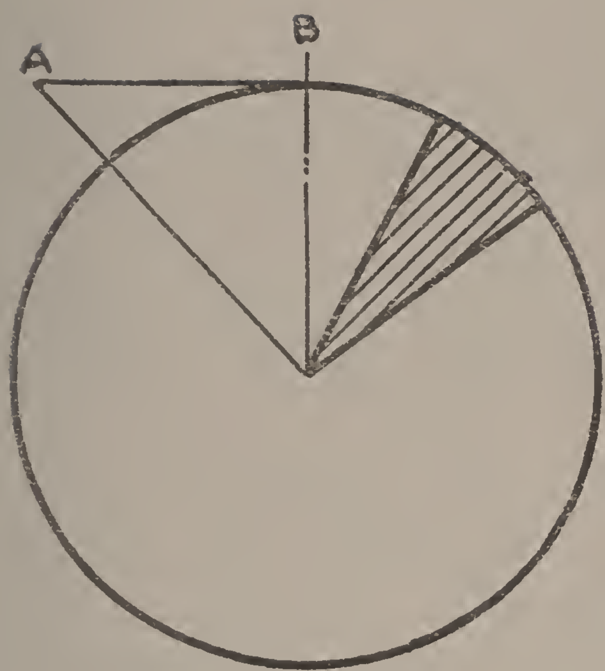

Fig. 12.

The SECANT is a line drawn from the center of a circle through one end of an arc, and terminated by a tangent drawn through the other end; the line A to C, Fig. 12, illustrates the same

The SECTOR is a portion of the area of a circle included between two radii and an arc, as shown by the shaded part, Fig. 12.

To find the area of a circle, square the diameter and multiply by the constant .7854.

Example: What is the area of a circle whose diameter is 10 inches?

Solution: $10^2 = 100$; and $100 \times .7854 \times 78.54$ sq. in.

To find the circumference multiply the diameter by the constant 3.1416.

Example: What is the diameter of a circle whose diameter is 10 inches?

Solution: $10 \times 3.1416 = 31.416$ inches.

When a circle is divided into two equal halfs, each half is called a SEMI-CIRCLE, and each half of the circumference is called the SEMI-CIRCUMFERENCE. A SPHERE, or a BALL, or a GLOBE, is a solid bounded by a uniformly curved surface, every point the same distance from the center. To find the area of a sphere, square the diameter and multiply the result by 3.1416.

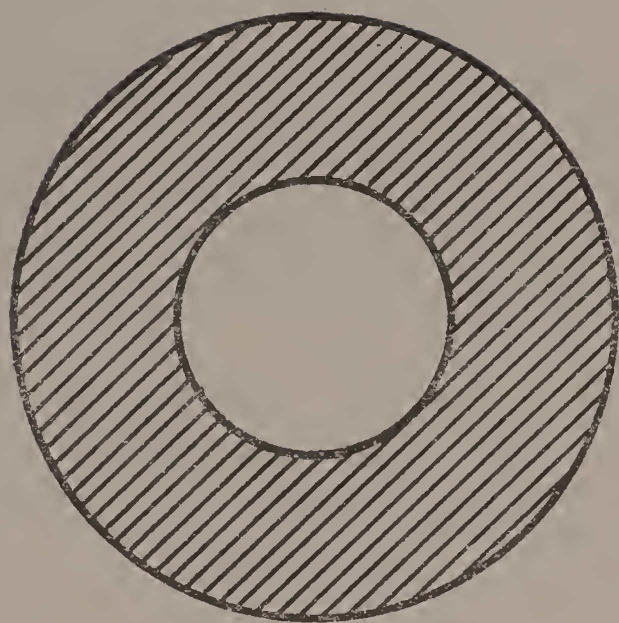

Fig. 13.

The circular ring is the area between two concentric circles, being indicated by the shaded part, Fig. 13.

Example: The diameter of the large circle is 10 inches and the diameter of the small circle is 5 inches, what is the area of the circular ring?

Solution: The area of the large circle is: $10^2 \times .7854 = 78.54$ sq., in.; the area of the small circle is $5^2 + .7854 =$ 19.635 sq. in. The area of the circular ring is the difference between these areas, or 78.54–19.635=58.905 sq. in.

The area of a segment cannot be found exactly except by principles of trigonometry, but an approximate rule gives results close enough for practical purposes.

Where:

A = Area of segment in square inches.
CD = Length of chord of the segment in inches.
G = Height of the segment in inches.

$$\frac{G^3}{2CD} + \frac{2CD \times G}{3} = A$$

Example: Assuming the distance from C to D, Fig. 6, to be 8 inches and the height G of the segment to be 2 inches, what is the area of the segment?

Solution:

$$\frac{8}{16} + \frac{16 \times 2}{3} = 11.166 \text{ sq. in.}$$

In Fig. 14 is shown a right angle triangle, the distance A to B being the base, the distance A to C the altitude, and the slant line from B to C is called the HYPOTENUSE.

Fig. 14.

In drawings the lines are made various ways, each way indicating a certain practice. The very light full line, Fig. 15, is used mostly as a dimension line. The dotted line is used to show parts hidden from view. The dash and two dot line is used to indicate the center lines; also, to indicate where a section has been taken when a sectional view is shown. The dash and one dot line is used mostly in projecting from one view to another, or to a dimension line. The heavy full line, made at least twice as thick as the light full lines, is used for shade lines.

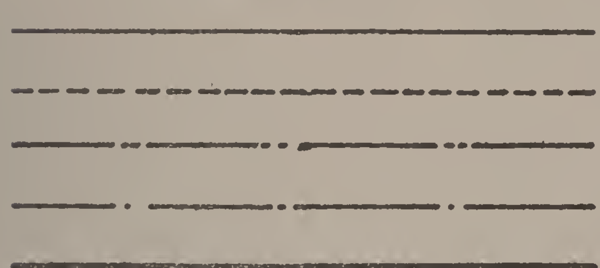

Fig. 15.

Dimension lines should have at their ends arrow-heads, not too flaring, the right and the wrong way being shown in Fig. 16.

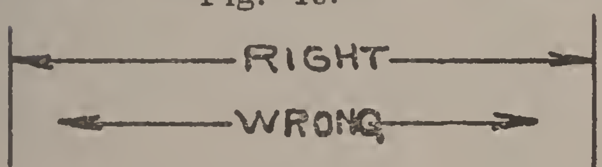

Fig. 16.

The SCALENE TRIANGLE, Fig. 17, is so-called as none of its two sides are of equal length.

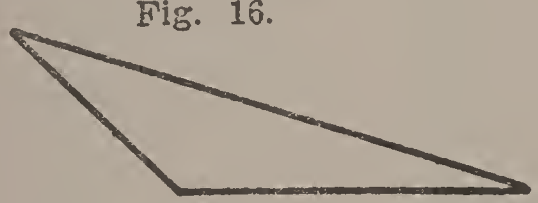

Fig. 17.

GEOMETRICAL FIGURES—POLYGONS.

A triangle is a figure with three sides and three angles; a square is a four-sided figure, all the angles of which are right angles, and all sides equal.

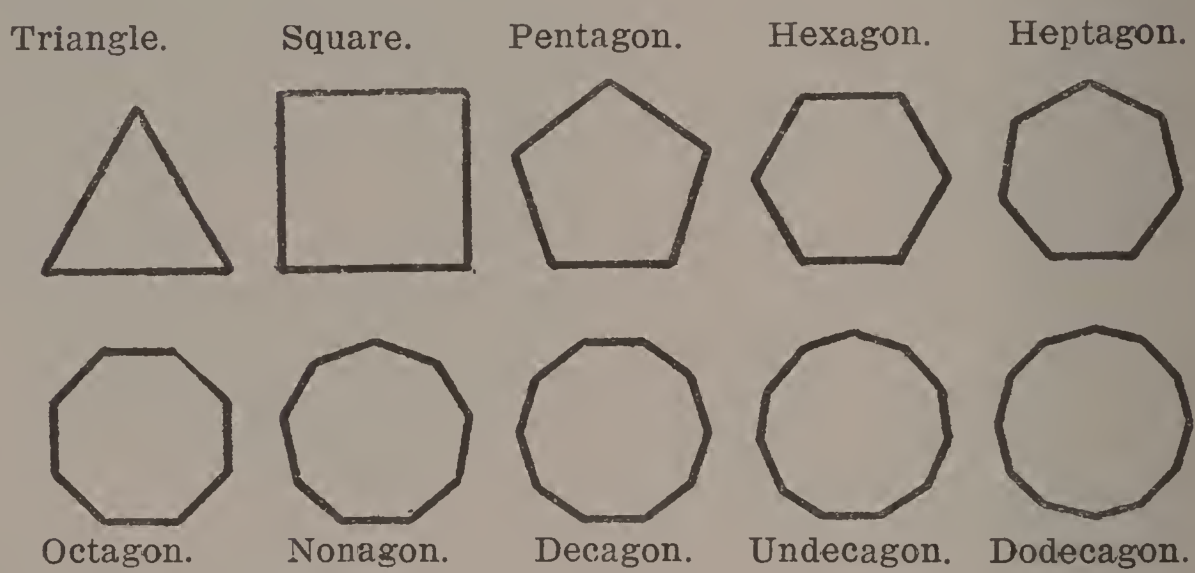

Fig. 18.

A pentagon is a plane figure with five sides and five angles; a hexagon with six sides and six angles; a heptagon with seven sides and seven angles; an octagon with eight sides and eight angles; a nonagon with nine sides and nine angles; a decagon with ten sides and ten angles; an undecagon with eleven sides and eleven angles; and a dodecagon with twelve sides and twelve angles, all as shown in Fig. 18.

TABLE OF DECIMAL EQUIVALENTS

OF EIGHTHS, SIXTEENTHS, THIRTY-SECONDS AND SIXTY-FOURTHS OF AN INCH.

TABLE I.

$\frac{1}{64}$	.015625	$\frac{33}{64}$	.515625
$\frac{1}{32}$	.03125	$\frac{17}{32}$	.53125
$\frac{3}{64}$	.046875	$\frac{35}{64}$	.546875
$\frac{1}{16}$	.0625	$\frac{9}{16}$	.5625
$\frac{5}{64}$	.078125	$\frac{37}{64}$	.578125
$\frac{3}{32}$	.09375	$\frac{19}{32}$	.59375
$\frac{7}{64}$	.109375	$\frac{39}{64}$	.609375
$\frac{1}{8}$	.1250	$\frac{5}{8}$	.6250
$\frac{9}{64}$	.140625	$\frac{41}{64}$	.640625
$\frac{5}{32}$	.15625	$\frac{21}{32}$	.65625
$\frac{11}{64}$	.171875	$\frac{43}{64}$	.671875
$\frac{3}{16}$	.1875	$\frac{11}{16}$	.6875
$\frac{13}{64}$	.203125	$\frac{45}{64}$	.703125
$\frac{7}{32}$	.21875	$\frac{23}{32}$	.71875
$\frac{15}{64}$	.234375	$\frac{47}{64}$	.734375
$\frac{1}{4}$	.2500	$\frac{3}{4}$	.7500
$\frac{17}{64}$	.265625	$\frac{49}{64}$	.765625
$\frac{9}{32}$	.28125	$\frac{25}{32}$	.78125
$\frac{19}{64}$	.296875	$\frac{51}{64}$	.796875
$\frac{5}{16}$	.3125	$\frac{13}{16}$	.8125
$\frac{21}{64}$	.328125	$\frac{53}{64}$	.828125
$\frac{11}{32}$	.34375	$\frac{27}{32}$	.84375
$\frac{23}{64}$	.359375	$\frac{55}{64}$	.859375
$\frac{3}{8}$	.3750	$\frac{7}{8}$	.8750
$\frac{25}{64}$	.390625	$\frac{57}{64}$	.890625
$\frac{13}{32}$	.40625	$\frac{29}{32}$	.90625
$\frac{27}{64}$	.421875	$\frac{59}{64}$	.921875
$\frac{7}{16}$	.4375	$\frac{15}{16}$	.9375
$\frac{29}{64}$	.453125	$\frac{61}{64}$	.953125
$\frac{15}{32}$	.46875	$\frac{31}{32}$	.96875
$\frac{31}{64}$	.484375	$\frac{63}{64}$	.984375
$\frac{1}{2}$	.5000	1	1.0000

CONSTANT FOR FINDING DIAMETER AT BOTTOM OF THREAD.

TABLE II.

Threads per Inch	U. S. Standard Constant	V Thread Constant	Threads per Inch	U. S. Standard Constant	V Thread Constant
64	.02030	.02706	16	.08119	.10825
60	.02165	.02887	14	.09279	.12372
56	.02320	.03093	13	.09993	.13323
50	.02598	.03464	12	.10825	.14434
48	.02706	.03608	11	.11809	.15746
44	.02952	.03936	10	.12990	.17321
40	.03248	.04330	9	.14434	.19245
36	.03608	.04811	8	.16238	.21651
32	.04059	.05413	7	.18558	.24744
30	.04330	.05773	6	.21651	.28868
28	.04639	.06186	5½	.23619	.31492
26	.04996	.06662	5	.25981	.34641
24	.05413	.07217	4½	.28868	.38490
22	.05905	.07873	4	.32476	.43301
20	.06495	.08660	3½	.37115	.49487
18	.07217	.09623	3	.43301	.57733

C = Constant for number of threads per inch.

D = Outside diameter.

D^1 = Diameter at bottom of thread.

$$D^1 = D - C.$$

EXAMPLE.

The outside diameter of U. S. S. screw thread is 2 inches; 4½ threads per inch; find diameter at bottom of thread. $2 - .2886 = 1.7114$ inches.

STEAM TABLES.

TABLE III.

Pressure in Pounds per Square Inch above vacuum	Temperature in Degrees Fahrenheit	Pressure in Pounds per Square Inch above vacuum	Temperature in Degrees Fahrenheit
2	126.3	104	330.4
4	153.1	108	333.2
6	170.1	110	334.6
8	182.9	114	337.2
10	193.3	118	339.8
12	202.	120	341.1
14	209.6	124	343.5
14.7	212	128	345.9
16	216.3	130	347.1
18	222.4	134	349.5
20	228	138	351.7
22	233.1	140	352.9
24	237.8	144	355.1
26	242.2	148	357.2
28	246.4	150	358.3
30	250.3	154	360.3
32	254	158	362.4
34	257.5	160	363.4
36	260.9	164	365.4
38	264.1	168	367.3
40	267.1	170	368.3
42	270.1	174	370.2
44	272.9	178	372.1
46	275.7	180	373
48	278.3	184	374.8
50	280.9	188	376.6
54	285.7	190	377.4
58	290.3	194	379.2
62	294.7	198	380.9

TABLE III—CONTINUED.

Pressure in Pounds per Square Inch above vacuum	Temperature in Degrees Fahrenheit	Pressure in Pounds per Square Inch above vacuum	Temperature in Degrees Fahrenheit
66	298.8	200	381.7
70	302.7	204	383.4
74	306.5	208	385.1
78	310.1	210	385.9
82	313.5	214	387.5
86	316.8	218	389.1
90	320	220	389.8
94	323.6	224	391.4
98	326.1	228	392.9
100	327.6	230	393.7
234	395.2	274	409.2
238	396.7	278	410.5
240	397.4	280	411.1
244	398.9	284	412.4
248	400.3	288	413.7
250	401	290	414.3
254	402.4	294	415.6
258	403.8	298	416.8
260	404.5	300	417.4
264	405.8	350	431.9
268	407.2	400	445.2
270	407.9	500	466.6

To reduce to guage pressures at sea level subtract 14.7 from pressures given in the column. For instance, if the gauge pressure is 170 pounds, then the pressure in pounds per square inch above vacuum will be nearly 185 pounds. In altitudes above sea level, subtract pressures per square inch as given in Table No. IV.

BOILING POINT IN DEGREES.

TABLE IV.

Boiling point in degrees, Fahrenheit	Altitude above sea-level in feet	Atmospheric pressure in lbs. per square inch
184	15,221	8.19
185	14,649	8.37
186	14,075	8.56
187	13,498	8.75
188	12,934	8.94
189	12,367	9.13
190	11,799	9.33
191	11,243	9.53
192	10,685	9.74
193	10,127	9.95
194	9,579	10.16
195	9,031	10.38
196	8,481	10.60
197	7,932	10.82
198	7,381	11.05
199	6,843	11.28
200	6,304	11.52
201	5,764	11.76
202	5,225	12.01
203	4,697	12.25
204	4,169	12.51
205	3,642	12.77
206	3,115	13.03
207	2,589	13.29
208	2,063	13.57
209	1,539	13.84
210	1,025	14.12
211	512	14.41
212	Sea-level	14.70

AREAS AND CIRCUMFERENCE OF CIRCLES.

TABLE V.

Diam.	Circum.	Area.	Diam.	Circum.	Area.
1/64	.0491	.0002	4 1/2	14.1372	15.9043
1/32	.0982	.0008	4 5/8	14.5299	16.8002
1/16	.1963	.0031	4 3/4	14.9226	17.7206
1/8	.3927	.0123	4 7/8	15.3153	18.6655
3/16	.5890	.0276	5	15.7080	19.6350
1/4	.7854	.0491	5 1/8	16.1007	20.6290
5/16	.9817	.0767	5 1/4	16.4934	21.6476
3/8	1.1781	.1104	5 3/8	16.8861	22.6907
7/16	1.3744	.1503	5 1/2	17.2788	23.7583
1/2	1.5708	.1963	5 5/8	17.6715	24.8505
9/16	1.7671	.2485	5 3/4	18.0642	25.9673
5/8	1.9635	.3068	5 7/8	18.4569	27.1086
11/16	2.1598	.3712	6	18.8496	28.2744
3/4	2.3562	.4418	6 1/8	19.2423	29.4648
13/16	2.5525	.5185	6 1/4	19.6350	30.6797
7/8	2.7489	.6013	6 3/8	20.0277	31.9191
15/16	2.9452	.6903	6 1/2	20.4204	33.1831
1	3.1416	.7854	6 5/8	20.8131	34.4717
1 1/8	3.5343	.9940	6 3/4	21.2058	35.7848
1 1/4	3.9270	1.2272	6 7/8	21.5985	37.1224
1 3/8	4.3197	1.4849	7	21.9912	38.4846
1 1/2	4.7124	1.7671	7 1/8	22.3839	39.8713
1 5/8	5.1051	2.0739	7 1/4	22.7766	41.2826
1 3/4	5.4978	2.4053	7 3/8	23.1693	42.7184
1 7/8	5.8905	2.7612	7 1/2	23.5620	44.1787
2	6.2832	3.1416	7 5/8	23.9547	45.6636
2 1/8	6.6759	3.5466	7 3/4	24.3474	47.1731
2 1/4	7.0686	3.9761	7 7/8	24.7401	48.7071
2 3/8	7.4613	4.4301	8	25.1328	50.2656
2 1/2	7.8540	4.9087	8 1/8	25.5255	51.8487
2 5/8	8.2467	5.4119	8 1/4	25.9182	53.4563
2 3/4	8.6394	5.9396	8 3/8	26.3109	55.0884
2 7/8	9.0321	6.4918	8 1/2	26.7036	56.7451
3	9.4248	7.0686	8 5/8	27.0963	58.4264
3 1/8	9.8175	7.6699	8 3/4	27.4890	60.1322
3 1/4	10.2102	8.2958	8 7/8	27.8817	61.8625
3 3/8	10.6029	8.9462	9	28.2744	63.6174
3 1/2	10.9956	9.6211	9 1/8	28.6671	65.3968
3 5/8	11.3883	10.3206	9 1/4	29.0598	67.2008
3 3/4	11.7810	11.0447	9 3/8	29.4525	69.0293
3 7/8	12.1737	11.7933	9 1/2	29.8452	70.8823
4	12.5664	12.5664	9 5/8	30.2379	72.7599
4 1/8	12.9591	13.3641	9 3/4	30.6306	74.6621
4 1/4	13.3518	14.1863	9 7/8	31.0233	76.589
4 3/8	13.7445	15.0330	10	31.4160	78.540

TABLE—CONTINUED.

Diam.	Circum.	Area.	Diam.	Circum.	Area.
10⅛	31.8087	80.516	15¾	49.4802	194.828
10¼	32.2014	82.516	15⅞	49.8729	197.933
10⅜	32.5941	84.541	16	50.2656	201.062
10½	32.9868	86.590	16⅛	50.6583	204.216
10⅝	33.3795	88.664	16¼	51.0510	207.395
10¾	33.7722	90.763	16⅜	51.4437	210.598
10⅞	34.1649	92.886	16½	51.8364	213.825
11	34.5576	95.033	16⅝	52.2291	217.077
11⅛	34.9503	97.205	16¾	52.6218	220.354
11¼	35.3430	99.402	16⅞	53.0145	223.655
11⅜	35.7357	101.623	17	53.4072	226.981
11½	36.1284	103.869	17⅛	53.7999	230.331
11⅝	36.5211	106.139	17¼	54.1926	233.706
11¾	36.9138	108.434	17⅜	54.5853	237.105
11⅞	37.3065	110.754	17½	54.9780	240.529
12	37.6992	113.098	17⅝	55.3707	243.977
12⅛	38.0919	115.466	17¾	55.7634	247.450
12¼	38.4846	117.859	17⅞	56.1561	250.948
12⅜	38.8773	120.277	18	56.5488	254.470
12½	39.2700	122.719	18⅛	56.9415	258.016
12⅝	39.6627	125.185	18¼	57.3342	261.587
12¾	40.0554	127.677	18⅜	57.7269	265.183
12⅞	40.4481	130.192	18½	58.1196	268.803
13	40.8408	132.733	18⅝	58.5123	272.448
13⅛	41.2335	135.297	18¾	58.9050	276.117
13¼	41.6262	137.887	18⅞	59.2977	279.811
13⅜	42.0189	140.501	19	59.6904	283.529
13½	42.4116	143.139	19⅛	60.0831	287.272
13⅝	42.8043	145.802	19¼	60.4758	291.040
13¾	43.1970	148.490	19⅝	60.8685	294.832
13⅞	43.5897	151.202	19½	61.2612	298.648
14	43.9824	153.938	19⅝	61.6539	302.489
14⅛	44.3751	156.700	19¾	62.0466	306.355
14¼	44.7678	159.485	19⅞	62.4393	310.245
14⅜	45.1605	162.296	20	62.8320	314.160
14½	45.5532	165.130	20⅛	63.2247	318.099
14⅝	45.9459	167.990	20¼	63.6174	322.063
14¾	46.3386	170.874	20⅜	64.0101	326.051
14⅞	46.7313	173.782	20½	64.4028	330.064
15	47.1240	176.715	20⅝	64.7955	334.102
15⅛	47.5167	179.673	20¾	65.1882	338.164
15¼	47.9094	182.655	20⅞	65.5809	342.250
15⅜	48.3021	185.661	21	65.9736	346.361
15½	48.6948	188.692	21⅛	66.3663	350.497
15⅝	49.0875	191.748	21¼	66.7590	354.657

TABLE—CONTINUED.

Diam.	Circum.	Area.	Diam.	Circum.	Area.
21⅜	67.1517	358.842	21	84.8232	572.557
21½	67.5444	363.051	27⅛	85.2159	577.870
21⅝	67.9371	367.285	27¼	85.6086	583.209
21¾	68.3298	371.543	27⅜	86.0013	588.571
21⅞	68.7225	375.826	27½	86.3940	593.959
22	69.1152	380.134	27⅝	86.7867	599.371
22⅛	69.5079	384.466	27¾	87.1794	604.807
22¼	69.9006	388.822	27⅞	87.5721	610.268
22⅜	70.2933	393.203	28	87.9648	615.754
22½	70.6860	397.609	28⅛	88.3575	621.264
22⅝	71.0787	402.038	28¼	88.7502	626.798
22¾	71.4714	406.494	28⅜	89.1429	632.357
22⅞	71.8641	410.973	28½	89.5356	637.941
23	72.2568	415.477	28⅝	89.9283	643.549
23⅛	72.6495	420.004	28¾	90.3210	649.182
23¼	73.0422	424.558	28⅞	90.7137	654.840
23⅜	73.4349	429.135	29	91.1064	660.521
23½	73.8276	433.737	29⅛	91.4991	666.228
23⅝	74.2203	438.364	29¼	91.8918	671.959
23¾	74.6130	443.015	29⅜	92.2845	677.714
23⅞	75.0057	447.690	29½	92.6772	683.494
24	75.3984	452.390	29⅝	93.0699	689.299
24⅛	75.7911	457.115	29¾	93.4626	695.128
24¼	76.1838	461.864	29⅞	93.8553	700.982
24⅜	76.5765	466.638	30	94.2480	706.860
24½	76.9692	471.436	30⅛	94.6407	712.763
24⅝	77.3619	476.259	30¼	95.0334	718.690
24¾	77.7546	481.107	30⅜	95.4261	724.642
24⅞	78.1473	485.979	30½	95.8188	730.618
25	78.5400	490.875	30⅝	96.2115	736.619
25⅛	78.9327	495.796	30¾	96.6042	742.645
25¼	79.3254	500.742	30⅞	96.9969	748.695
25⅜	79.7181	505.712	31	97.3896	754.769
25½	80.1108	510.706	31⅛	97.7823	760.869
25⅝	80.5035	515.726	31¼	98.1750	766.992
25¾	80.8962	520.769	31⅜	98.5677	773.140
25⅞	81.2889	525.838	31½	98.9604	779.313
26	81.6816	530.930	31⅝	99.3531	785.510
26⅛	82.0743	536.048	31¾	99.7458	791.732
26¼	82.4670	541.190	31⅞	100.1385	797.979
26⅜	82.8597	546.356	32	100.5312	804.250
26½	83.2524	551.547	32⅛	100.9239	810.545
26⅝	83.6451	556.763	32¼	101.3166	816.865
26¾	84.0378	562.003	32⅜	101.7093	823.210
26⅞	84.4305	567.267	32½	102.1020	829.579

TABLE—CONTINUED.

Diam.	Circum.	Area.	Diam.	Circum.	Area.
32⅝	102.4947	835.972	38¼	120.166	1,149.089
32¾	102.8874	842.391	38⅜	120.559	1,156.612
32⅞	103.280	848.833	38½	120.952	1,164.159
33	103.673	855.301	38⅝	121.344	1,171.731
33⅛	104.065	861.792	38¾	121.737	1,179.327
33¼	104.458	868.309	38⅞	122.130	1,186.948
33⅜	104.851	874.850	39	122.522	1,194.593
33½	105.244	881.415	39⅛	122.915	1,202.263
33⅝	105.636	888.005	39¼	123.308	1,209.958
33¾	106.029	894.620	39⅜	123.700	1,217.677
33⅞	106.422	901.259	39½	124.093	1,225.420
34	106.814	907.922	39⅝	124.486	1,233.188
34⅛	107.207	914.611	39¾	124.879	1,240.981
34¼	107.600	921.323	39⅞	125.271	1,248.798
34⅜	107.992	928.061	40	125.664	1,256.640
34½	108.385	934.822	40⅛	126.057	1,264.510
34⅝	108.778	941.609	40¼	126.449	1,272.400
34¾	109.171	948.420	40⅜	126.842	1,280.310
34⅞	109.563	955.255	40½	127.235	1,288.250
35	109.956	962.115	40⅝	127.627	1,296.220
35⅛	110.349	969.000	40¾	128.020	1,304.210
35¼	110.741	975.909	40⅞	128.413	1,312.220
35⅜	111.134	982.842	41	128.806	1,320.260
35½	111.527	989.800	41⅛	129.198	1,328.320
35⅝	111.919	996.783	41¼	129.591	1,336.410
35¾	112.312	1.003.790	41⅜	129.984	1,344.520
35⅞	112.705	1,010.822	41½	130.376	1,352.660
36	113.098	1.017.878	41⅝	130.769	1,360.820
36⅛	113.490	1,024.960	41¾	131.162	1,369.000
36¼	113.883	1,032.065	41⅞	131.554	1,377.210
36⅜	114.276	1,039.195	42	131.947	1,385.450
36½	114.668	1,046.349	42⅛	132.340	1,393.700
36⅝	115.061	1,053.528	42¼	132.733	1,401.990
36¾	115.454	1,060.732	42⅜	133.125	1,410.300
36⅞	115.846	1,067.960	42½	133.518	1,418.630
37	116.239	1,075.213	42⅝	133.911	1,426.990
37⅛	116.632	1,082.490	42¾	134.303	1,435.370
37¼	117.025	1,089.792	42⅞	134.696	1,443.770
37⅜	117.417	1,097.118	43	135.089	1,452.200
37½	117.810	1,104.469	43⅛	135.481	1,460.660
37⅝	118.203	1,111.844	43¼	135.874	1,469.140
37¾	118.595	1,119.244	43⅜	136.267	1,477.640
37⅞	118.988	1,126.669	43½	136.660	1,486.170
38	119.381	1,134.118	43⅝	137.052	1,494.730
38⅛	119.773	1,141.591	43¾	137.445	1,503.300

TABLE—CONTINUED.

Diam.	Circum.	Area.	Diam.	Circum.	Area.
43⅞	137.838	1,511.91	49½	155.509	1,924.43
44	138.230	1,520.53	49⅝	155.902	1,934.16
44⅛	138.623	1,529.19	49¾	156.295	1,943.91
44¼	139.016	1,537.86	49⅞	156.687	1,953.69
44⅜	139.408	1,546.56	50	157.080	1,963.50
44½	139.801	1,555.29	50⅛	157.473	1,973.33
44⅝	140.194	1,564.04	50¼	157.865	1,983.18
44¾	140.587	1,572.81	50⅜	158.258	1,993.06
44⅞	140.979	1,581.61	50½	158.651	2,002.97
45	141.372	1,590.43	50⅝	159.043	2,012.89
45⅛	141.765	1,599.28	50¾	159.436	2,022.85
45¼	142.157	1,608.16	50⅞	159.829	2,032.82
45⅜	142.550	1,617.05	51	160.222	2,042.83
45½	142.943	1,625.97	51⅛	160.614	2,052.85
45⅝	143.335	1,634.92	51¼	161.007	2,062.90
45¾	143.728	1,643.89	51⅜	161.400	2,072.98
45⅞	144.121	1,652.89	51½	161.792	2,083.08
46	144.514	1,661.91	51⅝	162.185	2,093.20
46⅛	144.906	1,670.95	51¾	162.578	2,103.35
46¼	145.299	1,680.02	51⅞	162.970	2,113.52
46⅜	145.692	1,689.11	52	163.363	2,123.72
46½	146.084	1,698.23	52⅛	163.756	2,133.94
46⅝	146.477	1,707.37	52¼	164.149	2,144.19
46¾	146.870	1,716.54	52⅜	164.541	2,154.46
46⅞	147.262	1,725.73	52½	164.934	2,164.76
47	147.655	1,734.95	52⅝	165.327	2,175.08
47⅛	148.048	1,744.19	52¾	165.719	2,185.42
47¼	148.441	1,753.45	52⅞	166.112	2,195.79
47⅜	148.833	1,762.74	53	166.505	2,206.19
47½	149.226	1,772.06	53⅛	166.897	2,216.61
47⅝	149.619	1,781.40	53¼	167.290	2,227.05
47¾	150.011	1,790.76	53⅜	167.683	2,237.52
47⅞	150.404	1,800.15	53½	168.076	2,248.01
48	150.797	1,809.56	53⅝	168.468	2,258.53
48⅛	151.189	1,819.00	53¾	168.861	2,269.07
48¼	151.582	1,828.46	53⅞	169.254	2,279.64
48⅜	151.975	1,837.95	54	169.646	2,290.23
48½	152.368	1,847.46	54⅛	170.039	2,300.84
48⅝	152.760	1,856.99	54¼	170.432	2,311.48
48¾	153.153	1,866.55	54⅜	170.824	2,322.15
48⅞	153.546	1,876.14	54½	171.217	2,332.83
49	153.938	1,885.75	54⅝	171.610	2,343.55
49⅛	154.331	1,895.38	54¾	172.003	2,354.29
49¼	154.724	1,905.04	54⅞	172.395	2,365.05
49⅜	155.116	1,914.72	55	172.788	2,375.83

TABLE—CONTINUED.

Diam.	Circum.	Area.	Diam.	Circum.	Area.
55⅛	173.181	2,386.65	60¾	190.852	2,898.57
55¼	173.573	2,397.48	60⅞	191.245	2,910.51
55⅜	173.966	2,408.34	61	191.638	2,922.47
55½	174.359	2,419.23	61⅛	192.030	2,934.46
55⅝	174.751	2,430.14	61¼	192.423	2,946.48
55¾	175.144	2,441.07	61⅜	192.816	2,958.52
55⅞	175.537	2,452.03	61½	193.208	2,970.58
56	175.930	2,463.01	61⅝	193.601	2,982.67
56⅛	176.322	2,474.02	61¾	193.994	2,994.78
56¼	176.715	2,485.05	61⅞	194.386	3,006.92
56⅜	177.108	2,496.11	62	194.779	3,019.08
56½	177.500	2,507.19	62⅛	195.172	3,031.26
56⅝	177.893	2,518.30	62¼	195.565	3,043.47
56¾	178.286	2,529.43	62⅜	195.957	3,055.71
56⅞	178.678	2,540.58	62½	196.350	3,067.97
57	179.071	2,551.76	62⅝	196.743	3,080.25
57⅛	179.464	2,562.97	62¾	197.135	3,092.56
57¼	179.857	2,574.20	62⅞	197.528	3,104.89
57⅜	180.249	2,585.45	63	197.921	3,117.25
57½	180.642	2,596.73	63⅛	198.313	3,129.64
57⅝	181.035	2,608.03	63¼	198.706	3,142.04
57¾	181.427	2,619.36	63⅜	199.099	3,154.47
57⅞	181.820	2,630.71	63½	199.492	3,166.93
58	182.213	2,642.09	63⅝	199.884	3,179.41
58⅛	182.605	2,653.49	63¾	200.277	3,191.91
58¼	182.998	2,664.91	63⅞	200.670	3,204.44
58⅜	183.391	2,676.36	64	201.062	3,217.00
58½	183.784	2,687.84	64⅛	201.455	3,229.58
58⅝	184.176	2,699.33	64¼	201.848	3,242.18
58¾	184.569	2,710.86	64⅜	202.240	3,254.81
58⅞	184.962	2,722.41	64½	202.633	3,267.46
59	185.354	2,733.98	64⅝	203.026	3,280.14
59⅛	185.747	2,745.57	64¾	203.419	3,292.84
59¼	186.140	2,757.20	64⅞	203.811	3,305.56
59⅜	186.532	2,768.84	65	204.204	3,318.31
59½	186.925	2,780.51	65⅛	204.597	3,331.09
59⅝	187.318	2,792.21	65¼	204.989	3,343.89
59¾	187.711	2,803.93	65⅜	205.382	3,356.71
59⅞	188.103	2,815.67	65½	205.775	3,369.56
60	188.496	2,827.44	65⅝	206.167	3,382.44
60⅛	188.889	2,839.23	65¾	206.560	3,395.33
60¼	189.281	2,851.05	65⅞	206.953	3,408.26
60⅜	189.674	2,862.89	66	207.346	3,421.20
60½	190.067	2,874.76	66⅛	207.738	3,434.17
60⅝	190.459	2,886.65	66¼	208.131	3,447.17

TABLE—CONTINUED.

Diam.	Circum.	Area.	Diam.	Circum.	Area.
66⅜	208.524	3,460.19	72	226.195	4,071.51
66½	208.916	3,473.24	72⅛	226.588	4,085.66
66⅝	209.309	3,486.30	72¼	226.981	4,099.84
66¾	209.702	3,499.40	72⅜	227.373	4,114.04
66⅞	210.094	3,512.52	72½	227.766	4,128.26
67	210.487	3,525.66	72⅝	228.159	4,142.51
67⅛	210.880	3,538.83	72¾	228.551	4,156.78
67¼	211.273	3,552.02	72⅞	228.944	4,171.08
67⅜	211.665	3,565.24	73	229.337	4,185.40
67½	212.058	3,578.48	73⅛	229.729	4,199.74
67⅝	212.451	3,591.74	73¼	230.122	4,214.11
67¾	212.843	3,605.04	73⅜	230.515	4,228.51
67⅞	213.236	3,618.35	73½	230.908	4,242.93
68	213.629	3,631.69	75⅝	231.300	4,257.37
68⅛	214.021	3,645.05	73¾	231.693	4,271.84
68¼	214.414	3,658.44	73⅞	232.086	4,286.33
68⅜	214.807	3,671.86	74	232.478	4,300.85
68½	215.200	3,685.29	74⅛	232.871	4,315.39
68⅝	215.592	3,698.76	74¼	233.264	4,329.96
68¾	215.985	3,712.24	74⅜	233.656	4,344.55
68⅞	216.378	3,725.75	74½	234.049	4,359.17
69	216.770	3,739.29	74⅝	234.442	4,373.81
69⅛	217.163	3,752.85	74¾	234.835	4,388.47
69¼	217.556	3,766.43	74⅞	235.227	4,403.16
69⅜	217.948	3,780.04	75	235.620	4,417.87
69½	218.341	3,793.68	75⅛	236.013	4,432.61
69⅝	218.734	3,807.34	75¼	236.405	4,447.38
69¾	219.127	3,821.02	75⅜	236.798	4,462.16
69⅞	219.519	3,834.73	75½	237.191	4,476.98
70	219.912	3,848.46	75⅝	237.583	4,491.81
70⅛	220.305	3,862.22	75¾	237.976	4,506.67
70¼	220.697	3,876.00	75⅞	238.369	4,521.56
70⅜	221.090	3,889.80	76	238.762	4,536.47
70½	221.483	3,903.63	76⅛	239.154	4,551.41
70⅝	221.875	3,917.49	76¼	239.547	4,566.36
70¾	222.268	3,931.37	76⅜	239.940	4,581.35
70⅞	222.661	3,945.27	76½	240.332	4,596.36
71	223.054	3,959.20	76⅝	240.725	4,611.39
71⅛	223.446	3,973.15	76¾	241.118	4,626.45
71¼	223.839	3,987.13	76⅞	241.510	4,641.53
71⅜	224.232	4,001.13	77	241.903	4,656.64
71½	224.624	4,015.16	77⅛	242.296	4,671.77
71⅝	225.017	4,029.21	77¼	242.689	4,686.92
71¾	225.410	4,043.29	77⅜	243.081	4,702.10
71⅞	225.802	4,057.39	77½	243.474	4,717.31

TABLE—CONTINUED.

Diam.	Circum.	Area.	Diam.	Circum.	Area.
77⅝	243.867	4,732.54	83¼	261.538	5,443.26
77¾	244.259	4,747.79	83⅜	261.931	5,459.62
77⅞	244.652	4,763.07	83½	262.324	5,476.01
78	245.045	4,778.37	83⅝	262.716	5,492.41
78⅛	245.437	4,793.70	83¾	263.109	5,508.84
78¼	245.830	4,809.05	83⅞	263.502	5,525.30
78⅜	246.223	4,824.43	84	263.894	5,541.78
78½	246.616	4,839.83	84⅛	264.287	5,558.29
78⅝	247.008	4,855.26	84¼	264.680	5,574.82
78¾	247.401	4,870.71	84⅜	265.072	5,591.37
78⅞	247.794	4,886.18	84½	265.465	5,607.95
79	248.186	4,901.68	84⅝	265.858	5,624.56
79⅛	248.579	4,917.21	84¾	266.251	5,641.18
79¼	248.972	4,932.75	84⅞	266.643	5,657.84
79⅜	249.364	4,948.33	85	267.036	5,674.51
79½	249.757	4,963.92	85⅛	267.429	5,691.22
79⅝	250.150	4,979.55	85¼	267.821	5,707.94
79¾	250.543	4,995.19	85⅜	268.214	5,724.69
79⅞	250.935	5,010.86	85½	268.607	5,741.47
80	251.328	5,026.56	85⅝	268.999	5,758.27
80½	251.721	5,042.28	85¾	269.392	5,775.10
80¼	252.113	5,058.03	85⅞	269.785	5,791.94
80⅜	252.506	5,073.79	86	270.178	5,808.82
80½	252.899	5,089.59	86⅛	270.570	5,825.72
80⅝	253.291	5,105.41	86¼	270.963	5,842.64
80¾	253.684	5,121.25	86⅜	271.356	5,859.59
80⅞	254.077	5,137.12	86½	271.748	5,876.56
81	254.470	5,153.01	86⅝	272.141	5,893.55
81⅛	254.862	5,168.93	86¾	227.534	5,910.58
81¼	255.255	5,184.87	86⅞	272.926	5,927.62
81⅜	255.648	5,200.83	87	273.319	5,944.69
81½	256.040	5,216.82	87⅛	273.712	5,961.79
81⅝	256.433	5,232.84	87¼	274.105	5.978.91
81¾	256.826	5,248.88	87⅜	274.497	5,996.05
71⅞	257.218	5,264.94	87½	274.890	6,013.22
82	257.611	5,281.03	87⅝	275.283	6,030.41
82⅛	258.004	5,297.14	87¾	275.675	6,047.63
82¼	258.397	5,313.28	87⅞	276.068	6,064.87
82⅜	258.789	5,329.44	88	276.461	6,082.14
82½	259.182	5,345.63	88⅛	276.863	6,099.43
82⅝	259.575	5,361.84	88¼	277.246	6,116.74
82¾	259.967	5,378.08	88⅜	277.629	6,134.08
82⅞	260.360	5,394.34	88½	278.032	6,151.45
83	260.753	5,410.62	88⅝	278.424	6,168.84
83⅛	261.145	5,426.93	88¾	278.817	6,186.25

TABLE—CONTINUED.

Diam.	Circum.	Area.	Diam.	Circum.	Area.
88⅞	279.210	6,203.69	94½	296.881	7,013.82
89	279.602	6,221.15	94⅝	297.274	7,032.39
89⅛	279.995	6,238.64	94¾	297.667	7,050.98
89¼	280.388	6,256.15	94⅞	298.059	7,069.59
89⅜	280.780	6,273.69	95	298.452	7,088.24
89½	281.173	6,291.25	95⅛	298.845	7,106.90
89⅝	281.566	6,308.84	95¼	299.237	7,125.59
89¾	281.959	6,326.45	95⅜	299.630	7,144.31
89⅞	282.351	6,344.08	95½	300.023	7,163.04
90	282.744	6,361.74	95⅝	300.415	7,181.81
90⅛	283.137	6,379.42	95¾	300.808	7,200.60
90¼	283.529	6,397.13	95⅞	301.201	7,219.41
90⅜	283.922	6,414.86	96	301.594	7,238.25
90½	284.315	6,432.62	96⅛	301.986	7,257.11
90⅝	284.707	6,450.40	96¼	302.379	7,275.99
90¾	285.100	6,468.21	96⅜	302.772	7,294.91
90⅞	285.493	6,486.04	96½	303.164	7,313.84
91	285.886	6,503.90	96⅝	303.557	7,332.80
91⅛	286,278	6,521.78	96¾	303.950	7,351.79
91¼	286.671	6,539.68	96⅞	304.342	7,370.79
91⅜	287.064	6,557.61	97	304.735	7,389.83
91½	287.456	6,575.56	97⅛	305.128	7,408.89
91⅝	287.849	6,593.54	97¼	305.521	7,427.97
91¾	288.242	6,611.55	97⅜	305.913	7,447.08
91⅞	288.634	6,629.57	97½	306.306	7,466.21
92	289.027	6,647.63	97⅝	306.699	7,485.37
92⅛	289.420	6,665.70	97¾	307.091	7,504.55
92¼	289.813	6,683.80	97⅞	307.484	7,523.75
92⅜	290.205	6,701.93	98	307.877	7,542.98
92½	290.598	6,720.08	98⅛	308.270	7,562.24
92⅝	290.991	6,738.25	98¼	308.662	7,581.52
92¾	291.383	6,756.45	98⅜	309.055	7,600.82
92⅞	291.776	6,774.68	98½	309.448	7,620.15
93	292.169	6,792.92	98⅝	309.840	7,639.50
93⅛	292.562	6,811.20	98¾	310.233	7,658.88
93¼	292.954	6,829.49	98⅞	310.626	7,678.28
93⅜	293.347	6,847.82	99	311.018	7,697.71
93½	293.740	6,866.16	99⅛	311.411	7,717.16
93⅝	294.132	6,884.53	99¼	311.804	7,736.63
93¾	294.525	6,902.93	99⅜	312.196	7,756.13
93⅞	294.918	6,921.35	99½	312.589	7,775.66
94	295.310	6,939.79	99⅝	312.982	7,795.21
94⅛	295.703	6,958.26	99¾	313.375	7,814.78
94¼	296.096	6,976.76	99⅞	313.767	7,834.38
94⅜	296.488	6,995.28	100	314.160	7,854.00

MEASURES.

MEASURES OF EXTENSION.

LINEAR MEASURE.

				Abbreviation
12	inches	=	1 foot	ft.
3	feet	=	1 yard	yd.
5.5	yards	=	1 rod	rd.
40	rods	=	1 furlong	fur.
8	furlongs	=	1 mile	mi.

SQUARE MEASURE.

144	square inches	=	1 square foot	sq. ft.
9	square feet	=	1 square yard	sq. yd.
$30\frac{1}{4}$	square yards	=	1 square rod	sq. rd.
160	square rods	=	1 square acre	A.
640	acres	=	1 square mile	sq. mi.

CUBIC MEASURE.

1,728	cubic inches	=	1 cubic foot	cu. ft.
27	cubic feet	=	1 cubic yard	cu. yd.
128	cubic feet	=	1 cord	cd.
$24\frac{3}{4}$	cubic feet	=	1 perch	P.

MEASURES OF WEIGHT.

AVOIRDUPOIS WEIGHT.

16 ounces	=	1 pound	lb.
100 pounds	=	1 hundred weight	cwt.
20 cwt., or 2,000 lbs.	=	1 ton	T.

LONG TON TABLE.

16 ounces	=	1 pound	lb.
112 pounds	=	1 hundred weight	cwt.
20 cwt., or 2,240 lbs.	=	1 ton	T.

TROY WEIGHT.

24 grains	=	1 pennyweight	pwt.
20 pennyweights	=	1 ounce	oz.
12 ounces	=	1 pound	lb.

NOTE—Troy weight used by jewelers.

MEASURES OF CAPACITY.

LIQUID MEASURE.

4 gills	=	1 pint	pt.
2 pints	=	1 quart	qt.
4 quarts	=	1gallon	gal.
31½ gallons	=	1 barrel	bbl.
2 barrels	=	1 hogshead	hhd.

DRY MEASURE.

2 pints	=	1 quart	qt.
8 quarts	=	1 peck	pk.
4 pecks	=	1 bushel	bu.

MEASURE OF TIME.

60	seconds	=	1 minute	min.
60	minutes	=	1 hour	hr.
24	hours	=	1 day	da.
7	days	=	1 week	wk.
365	days	=	1 common year	yr.
366	days	=	1 leap year	yr.
100	years	=	1 century	

NOTE—Thirty days is generally considered a month

MEASURES OF ANGLES OR ARCS.

60	seconds	=	1 minute	″.
60	minutes	=	1 degree	°.
90	degrees	=	1 right angle	L.
360	degrees	=	1 circle	cir.

MEASURES OF MONEY.

10	mills	=	1 cent	ct.
10	cents	=	1 dime	d.
10	dimes	=	1 dollars	$
10	dollars	=	1 eagle	E.

MISCELLANEOUS TABLE.

12 things are 1 dozen.
12 dozen are 1 gross.
12 gross are 1 great gross.
2 things are 1 pair.
20 things are 1 score.
1 league is 3 miles.
1 fathom is 6 feet.

1 meter is 39.37 inches.
1 hand is 4 inches.
1 palm is 3 inches.
1 span is 9 inches.
24 sheets are 1 quire.
20 quires are 1 ream.
1 bu. contains 2,150.4 cu. in.

1 United States gallon contains 231 cu. in.

1 United States gallon of water weighs 8.355 pounds, nearly.

1 British imperial gallon of water weighs 10 pounds.

1 cubic foot of water contains 7.481 United States standard gallons.

DECIMALS OF A FOOT FOR EACH $\frac{1}{32}$nd OF AN INCH.

Inch	0″	1″	2″	3″	4″	5″	6″	7″	8″	9″	10″	11″
0	0	.0833	.1667	.2500	.3333	.4167	5000	.5833	.6667	.7500	.8333	.9167
$\frac{1}{32}$	.0026	.0859	.1693	.2526	.3359	.4193	.5026	.5859	.6693	.7526	.8359	.9193
$\frac{1}{16}$	.0052	.0885	.1719	.2552	.3385	.4219	.5052	.5885	.6719	.7552	.8385	.9219
$\frac{3}{32}$	.0078	.0911	.1745	.2578	.3411	.4245	.5078	.5911	.6745	.7578	.8411	.9245
$\frac{1}{8}$	.0104	.0937	.1771	.2604	.3437	.4271	.5104	.5937	.6771	.7604	.8437	.9271
$\frac{5}{32}$	.0130	.0964	.1797	.2630	.3464	.4297	.5130	.5964	.6797	.7630	.8464	.9297
$\frac{3}{16}$	.0156	.0990	.1823	.2656	.3490	.4323	.5156	.5990	.6823	.7656	.8490	.9323
$\frac{7}{32}$	.0182	.1016	.1849	.2682	.3516	.4349	.5182	.6016	.6849	.7682	.8516	.9349
$\frac{1}{4}$	.0208	.1042	.1875	.2708	.3542	.4375	.5208	.6042	.6875	.7708	.8542	.9375
$\frac{9}{32}$	.0234	.1068	.1901	.2734	.3568	.4401	.5234	.6068	.6901	.7734	.8568	.9401
$\frac{5}{16}$	.0260	.1094	.1927	.2760	.3594	.4427	.5260	.6094	.6927	.7760	.8594	.9427
$\frac{11}{32}$	.0286	.1120	.1953	.2786	.3620	.4453	.5286	.6120	.6953	.7786	.8620	.9453
$\frac{3}{8}$	.0312	.1146	.1979	.2812	.3646	.4479	.5312	.6146	.6979	.7812	.8646	.9479
$\frac{13}{32}$	.0339	.1172	.2005	.2839	.3672	.4505	.5339	.6172	.7005	.7839	.8672	.9505
$\frac{7}{16}$	.0365	.1198	.2031	.2865	.3698	.4531	.5365	.6198	.7031	.7865	.8698	.9531
$\frac{15}{32}$	.0391	.1224	.2057	.2891	.3724	.4557	.5391	.6224	.7057	.7891	.8724	.9557
$\frac{1}{2}$	.0417	.1250	.2083	.2917	.3750	.4583	.5417	.6250	.7083	.7917	.8750	.9583
$\frac{17}{32}$	.0443	.1276	.2109	.2943	.3776	.4609	.5443	.6276	.7109	.7943	.8776	.9609
$\frac{9}{16}$	.0469	.1302	.2135	.2969	.3802	.4635	.5469	.6302	.7135	.7969	.8802	.9635
$\frac{19}{32}$	.0495	.1328	.2161	.2995	.3828	.4661	.5495	.6328	.7161	.7995	.8828	.9661
$\frac{5}{8}$	.0521	.1354	.2188	.3021	.3854	.4688	.5521	.6354	.7188	.8021	.8854	.9688
$\frac{21}{32}$	.0547	.1380	.2214	.3047	.3880	.4714	.5547	.6380	.7214	.8047	.8880	.9714
$\frac{11}{16}$	.0573	.1406	.2240	.3073	.3906	.4740	.5573	.6406	.7240	.8073	.8906	.9740
$\frac{23}{32}$	.0599	.1432	.2266	.3099	.3932	.4766	.5599	.6432	.7266	.8099	.8932	.9766
$\frac{3}{4}$	.0625	.1458	.2292	.3125	.3958	.4792	.5625	.6458	.7292	.8125	.8958	.9792
$\frac{25}{32}$	.0651	.1484	.2318	.3151	.3984	.4818	.5651	.6484	.7318	.8151	.8984	.9818
$\frac{13}{16}$	.0677	.1510	.2344	.3177	.4010	.4844	.5677	.6510	.7344	.8177	.9010	.9844
$\frac{27}{32}$	.0703	.1536	.2370	.3203	.4036	.4870	.5703	.6536	.7370	.8203	.9036	.9870
$\frac{7}{8}$	.0729	.1562	.2396	.3229	.4062	.4896	.5729	.6562	.7396	.8229	.9062	.9896
$\frac{29}{32}$	.0755	.1589	.2422	.3255	.4089	.4922	.5755	.6589	.7422	.8255	.9089	.9922
$\frac{15}{16}$	.0781	.1615	.2448	.3281	.4115	.4948	.5781	.6615	.7448	.8281	.9115	.9948
$\frac{31}{32}$	.0807	.1641	.2474	.3307	.4141	.4974	.5807	.6641	.7474	.8307	.9141	.9974
1	.....	.....	.....	.....	.....	.....	.....	.....	.....	.....	.....	1.0000

NUMBER OF GALLONS IN ROUND CISTERNS AND TANKS.

Depth in Feet.	DIAMETER IN FEET.																Depth in Feet.
	5	6	7	8	9	10	11	12	13	14	15	16	18	20	22	24	25	
5	735	1,060	1,440	1,875	2,380	2,925	3,550	4,237	4,960	5,765	6,698	7,520	9,516	11,750	14,215	16,918	18,358	5
6	881	1,270	1,728	2,250	2,855	3,510	4,260	5,084	5,952	6,918	8,038	9,024	11,419	14,100	17,059	20,302	22,030	6
7	1,028	1,480	2,016	2,625	3,330	4,095	4,970	5,931	6,944	8,071	9,378	10,528	13,322	16,450	19,902	23,680	25,701	7
8	1,175	1,690	2,304	3,000	3,805	4,680	5,680	6,778	7,936	9,224	10,718	12,032	15,225	18,800	22,745	27,070	29,372	8
9	1,322	1,900	2,592	3,375	4,280	5,265	6,390	7,625	8,928	10,377	12,058	13,536	17,128	21,150	25,588	30,454	33,043	9
10	1,469	2,110	2,880	3,750	4,755	5,850	7,100	8,472	9,920	11,530	13,398	15,040	19,031	23,500	28,431	33,838	36,714	10
11	1,616	2,320	3,168	4,125	5,250	6,435	7,810	9,319	10,913	12,683	14,738	16,544	20,934	25,850	31,274	37,222	40,385	11
12	1,762	2,530	3,456	4,500	5,705	7,020	8,520	10,166	11,904	13,836	16,078	18,048	22,837	28,200	34,117	40,606	44,056	12
13	1,909	2,740	3,744	4,875	6,180	7,605	9,230	11,013	12,896	14,989	17,418	19,552	24,740	30,550	36,960	43,990	47,727	13
14	2,056	2,950	4,032	5,250	6,655	8,190	9,940	11,860	13,888	16,142	18,758	21,056	26,643	32,900	39,803	47,374	51,398	14
15	2,203	3,160	4,320	5,625	7,130	8,775	10,650	12,707	14,880	17,295	20,098	22,260	28,546	35,250	42,646	50,758	55,069	15
16	2,356	3,370	4,608	6,000	7,605	9,360	11,360	13,554	15,872	18,448	21,438	24,064	30,449	37,600	45,489	54,142	58,740	16
17	2,497	3,580	4,896	6,375	8,080	9,945	12,070	14,401	16,864	19,601	22,778	25,568	32,352	39,950	48,332	57,520	62,411	17
18	2,644	3,790	5,184	6,750	8,535	10,530	12,780	15,248	17,856	20,754	24,118	27,072	34,255	42,300	51,175	60,910	66,082	18
19	2,791	4,000	5,472	7,125	9,010	11,115	13,490	16,095	18,848	21,907	25,458	28,576	36,158	44,650	54,018	64,294	69,753	19
20	2,938	4,210	5,760	7,500	9,490	11,700	14,200	16,942	19,840	23,060	26,798	30,080	38,062	47,000	56,861	67,678	73,424	20

For tanks that are tapering, measure the diameter four-tenths from the large end.

NUMBER OF RIVETS IN 100 POUNDS.

Length Rivets	Diameter of Rivets.											
	$\frac{1}{8}$	$\frac{3}{16}$	$\frac{1}{4}$	$\frac{5}{16}$	$\frac{3}{8}$	$\frac{7}{16}$	$\frac{1}{2}$	$\frac{5}{8}$	$\frac{11}{16}$	$\frac{3}{4}$	$\frac{7}{8}$	1
$\frac{1}{2}$	17500	15900	8000	5100	3200	1900	.....	....	....	....	....	....
$\frac{5}{8}$	16000	13800	7000	4500	2900	1800	.....	....	....	....	....	....
$\frac{3}{4}$	14400	12200	6300	4100	2373	1476	1103	642	....	....	....	....
$\frac{7}{8}$	13500	10900	5700	3700	2190	1371	1030	604	....	....	....	....
1	12000	9800	5200	3400	2034	1280	968	571	400	345	....	....
$1\frac{1}{8}$	11600	9000	4700	3100	1898	1200	910	541	382	322	208	....
$1\frac{1}{4}$	10800	8300	4400	2900	1780	1129	862	514	365	311	206	....
$1\frac{3}{8}$	10000	7600	4100	2700	1675	1066	815	489	350	295	204	....
$1\frac{1}{2}$	9300	7100	4000	2500	1582	1010	776	462	335	284	201	....
$1\frac{5}{8}$	8700	......	3800	2300	1498	960	740	446	324	275	199	132
$1\frac{3}{4}$	8100	6300	3500	2200	1424	914	707	428	311	266	192	128
$1\frac{7}{8}$	......	......	3400	2000	1356	872	672	411	302	257	185	124
2	......	5600	3000	1900	1295	834	648	395	293	249	178	120
$2\frac{1}{8}$	......	......	.....	.....	1238	800	623	381	285	240	172	116
$2\frac{1}{4}$	......	5000	2800	1800	1187	768	599	367	277	233	167	112
$2\frac{3}{8}$	......	......	.....	.....	1139	738	577	354	269	226	162	108
$2\frac{1}{2}$	......	4600	2500	1700	1095	711	556	343	261	219	157	104
$2\frac{5}{8}$	......	......	.....	.....	1052	687	537	332	253	212	152	100
$2\frac{3}{4}$	......	4200	2300	1500	1017	662	519	321	245	206	148	96
$2\frac{7}{8}$	......	......	.....	.....	982	636	503	311	237	201	144	92
3	......	3900	2200	1400	949	611	487	302	230	196	140	88
$3\frac{1}{4}$	......	3600	2000	1300	890	581	459	285	218	186	132	85
$3\frac{1}{2}$	......	3400	1900	1200	837	548	433	270	208	177	126	82
$3\frac{3}{4}$	......	3200	1800	1175	791	519	411	257	198	168	120	79
$3\frac{7}{8}$	......	......	.....	.....	.....	.....	395	250	195	165	119	....
4	......	3000	1700	1100	749	400	390	244	189	161	115	77
$4\frac{1}{4}$	......	......	1600	1050	700	.....	372	233	180	155	110	75
$4\frac{1}{2}$	......	......	1500	1000	650	.....	355	223	172	149	105	73
$4\frac{3}{4}$	......	......	1475	925	625	.....	339	214	166	143	101	71
5	......	......	1400	900	600	.....	325	205	160	136	97	69
$5\frac{1}{4}$	......	......	1350	850	575	.....	312	197	154	131	94	67
$5\frac{1}{2}$	......	......	1300	825	550	.....	300	190	149	127	91	65
$5\frac{3}{4}$	......	......	1250	775	525	.....	289	183	144	123	88	63
6	......	......	1200	750	500	.....	279	177	139	118	85	61
$6\frac{1}{4}$	......	......	.....	.....	.....	.....	.....	171	135	114	82	59
$6\frac{1}{2}$	......	......	.....	.....	.....	.....	.....	165	131	110	79	57
$6\frac{3}{4}$	......	......	.....	.....	.....	.....	.....	160	127	107	77	55
7	......	......	.....	.....	.....	.....	.....	155	123	104	75	53
$7\frac{1}{4}$	......	......	.....	.....	.....	.....	.....	150	119	100	73	51
$7\frac{1}{2}$	......	......	.....	.....	.....	.....	.....	146	116	97	71	49
$7\frac{3}{4}$	......	......	.....	.....	.....	.....	.....	142	113	94	69	47
8	......	......	.....	.....	.....	.....	.....	138	110	92	67	45

REFERENCES

The radius multiplied by the constant 6.2831 equals the circumference. The diameter multiplied by the constant .8862 equals side of equal square. The doubling of the diameter of a circle increases its area four times. The side of a square multiplied by the constant 1.128 will equal the diameter of a circle of equal area.

The surface of a sphere equals the square of the diameter multiplied by the constant 3.1416.

The area of a triangle is equal to the base multiplied by one-half of the altitude.

The area of a sector is equal to one-half of the length of the arc multiplied by the radius of the circle.

To find the capacity (U. S. gallons) of cylindrical tanks, square the diameter expressed in inches, multiplying this product by the length, and then the last found product by the constant .0034.

To find the number of square heating surface in tubes, multiply the number of tubes by the diameter of a tube in inches, and then this product the length of a tube in feet, and this last found product by the constant .2618.

PUNTON-CLARK PRESS, KANSAS CITY, MO.